HOPPMANN CORPORATION
5410 PORT ROYAL ROAD
POST OFFICE BOX 1463
SPRINGFIELD, VA. 22151
703/321-8800 TELEX 89-9131

12 March, 1979

Commanding General
U. S. ARRADCOM
Procurement Directorate
Chemical/Ballistics Procurement Division
Attn: M. Wilkens, DRDAR-PRB-S
Aberdeen Proving Ground, (Edgewood Area) Md. 21010

Subject: Contract DAAK11-79-M-0031
Tri-Bulletted, 4.32 MM
Folded Ammunition Test
System

Dear Sir:

We have completed work in accordance with the terms of the subject contract and delivered the output to Mr. A. Flatau, DRDAR,ACW. Technical aspects pertinent to this program can be discussed with Mr. A. J. Grandy, Manager of our Research and Engineering Division, Fox Pavilion, Suite 514, Jenkintown, Pa. 19046, (215) 576-0593.

We are pleased to have been of service in performing the above work and look forward to providing our services in the future.

Sincerely,

A. J. Grandy

A. J. Grandy, for
Charles W. Wheeler

AJG/bb

C/C A. Flatau; DRDAR,ACW
C/C DCASMA, Phila., Pa.
C/C C. Wheeler

Digitized by:
SMALL ARMS OF THE WORLD
SMALLARMSOFTHEWORLD.COM
ORIGINAL PROPERTY OF
Defence Academy of the United Kingdom

HOPPMANN CORPORATION
5410 PORT ROYAL ROAD
POST OFFICE BOX 1463
SPRINGFIELD, VA. 22151
703/321-8800 TELEX 89-9131

4.32 MM TRI-BULLETED FOLDED CARTRIDGE TEST SYSTEM

CONTRACT NO. DAAK11-79M-0031

12 MARCH, 1979

SUBMITTED BY: A. J. Grandy
A. J. Grandy
Hoppmann Corporation
Fox Pavilion
Jenkintown, Pa. 19046

DATE: 12 March, 1979

TABLE OF CONTENTS

	Page
INTRODUCTION	1
SYSTEM DESCRIPTION	2
SYSTEM OPERATION	3
PHOTOGRAPHS, TEST SYSTEM	4
APPENDIX I UNSOLICITED PROPOSAL	5
II CONTRACT DATA	
III DRAWINGS	

4.32 MM TRI-BULLETED FOLDED CARTRIDGE TEST SYSTEM

INTRODUCTION

The effectiveness of an advanced rifle system using 4.32 MM full-bore ammunition was recently established. Quantities of 4.32 MM cartridges with variations in propellant and additives were manufactured to support barrel erosion tests. In addition, the development of a tracer cartridge was initiated.

Along with the development of the ammunition, some work was conducted in the development of associated weapon prototypes. These efforts were aimed as a system approach toward replacement of the 5.56 MM M16A1 rifle.

The foregoing work addressed the development of an improved, "serially" fired system at the 4.32 MM caliber level. A further improvement over this serially fired system would be the simultaneous launch of three (3) 4.32 MM projectiles per trigger pull. (SALVO)

Work accomplished under this contract includes the design and manufacture of a tri-bulleted, folded cartridge, heavy walled test system. This system provides the capability, under instrumented conditions, to obtain preliminary interior, exterior and terminal ballistic data of salvo launched, 4.32 MM projectiles.

Obvious system benefits using the tri-bulleted folded cartridge approach include maximum potential to obtain multiple target hits per trigger pull, controlled suppressive fire capability, fool-proof qualification of tri-bulleted folded cartridges with matching barrel bores, reduced weight and bulk of the ammunition load at comparable energy levels and a highly cost-effective complete cartridge.

SYSTEM DESCRIPTION

REFER TO TEST SYSTEM ASSEMBLY, DRAWING NO. A-29108J

This heavy walled test device provides the capability of simultaneously launching three (3) 4.32 MM projectiles. System parameters which can be varied are:

a) Chamber volume

b) Propellant type

c) Chamber pressure

d) Muzzle velocity

e) Projectile dispersion

Parameters a) to d) are accommodated by varying the volume on the interior of the heavy walled test cartridges. This is accomplished by interchanging threaded plugs of various sizes on the forward end of the test cartridge.

Projectile dispersion e) can be varied by adjusting the muzzle dispersion ring. Threaded studs on the ring are used to mechanically squeeze or spread one or more of the barrel bores at the muzzle under controlled conditions.

A pressure tap on the breech block accommodates a pressure transducer, Kistler 617C or equal.

SYSTEM CHARACTERISTICS

Caliber ..... 4.32 MM (each of 3 bores)

Projectile Travel ..... 19 Inches

Max. Chamber Pressure (Design) .... 100K PSI

Launcher Material ..... Alloy Steel, 160K PSI Min. Y.S.

Fire Mode ..... Single Shot

Muzzle Velocity ..... 3700 FPS

Other: Remaining physical and performance characteristics for each 28.2 grain projectile will be similar to the 4.32 MM, full bore ammunition developed earlier at Frankford Arsenal.

SYSTEM OPERATION

A. FIRING SYSTEM

The firing pin will impinge on the primer at the center of the end cap for each cartridge. A safety is provided on the firing pin which keeps it retracted during loading operations. The firing pin is activated by a sear attached to a lanyard.

B. OPERATION

The selected ballistic conditions of the folded test cartridges are predetermined. The test cartridge is then propellant loaded, primed and inserted into the chamber cavity. The breech block is then inserted into the chamber cavity with the firing pin safety in position. The breech ring is then threaded onto the chamber. Qualification marks on the chamber and breech ring will indicate proper position prior to firing. Pressure transducer connections can now be made. The firing cycle is accomplished by retracting the firing pin a sufficient distance to allow insertion of the sear. NOTE: THE SAFETY MUST REMAIN IN THE FIRING PIN UNTIL IT IS DESIRED TO ACTIVATE THE SYSTEM.

B. MOUNTING

The test system is readily adaptable for mounting on "V" block assemblies on standard universal slides. Mounting locations are on the barrel at two points. This will leave the chamber area of the system unrestricted.

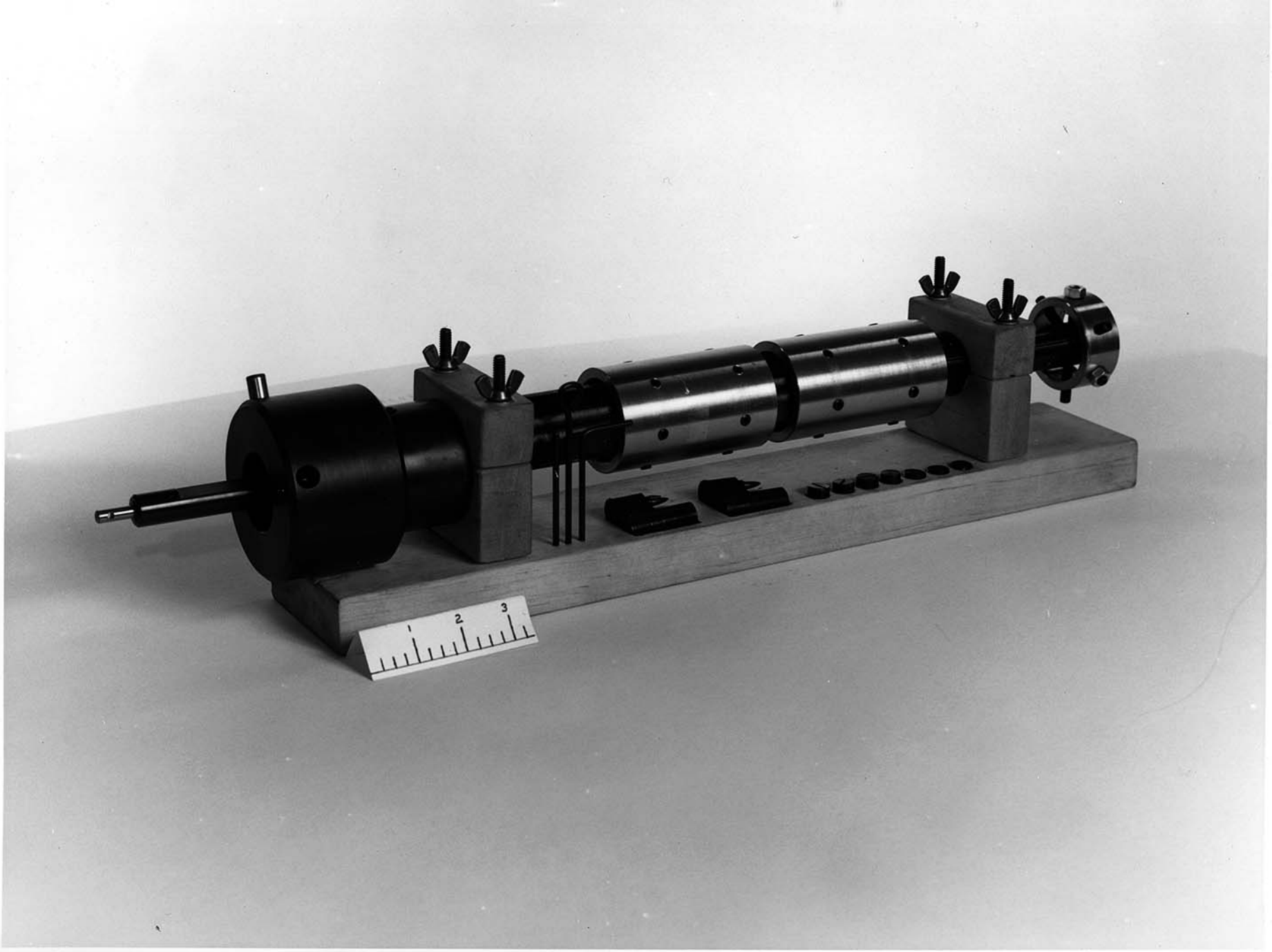
1
2
3

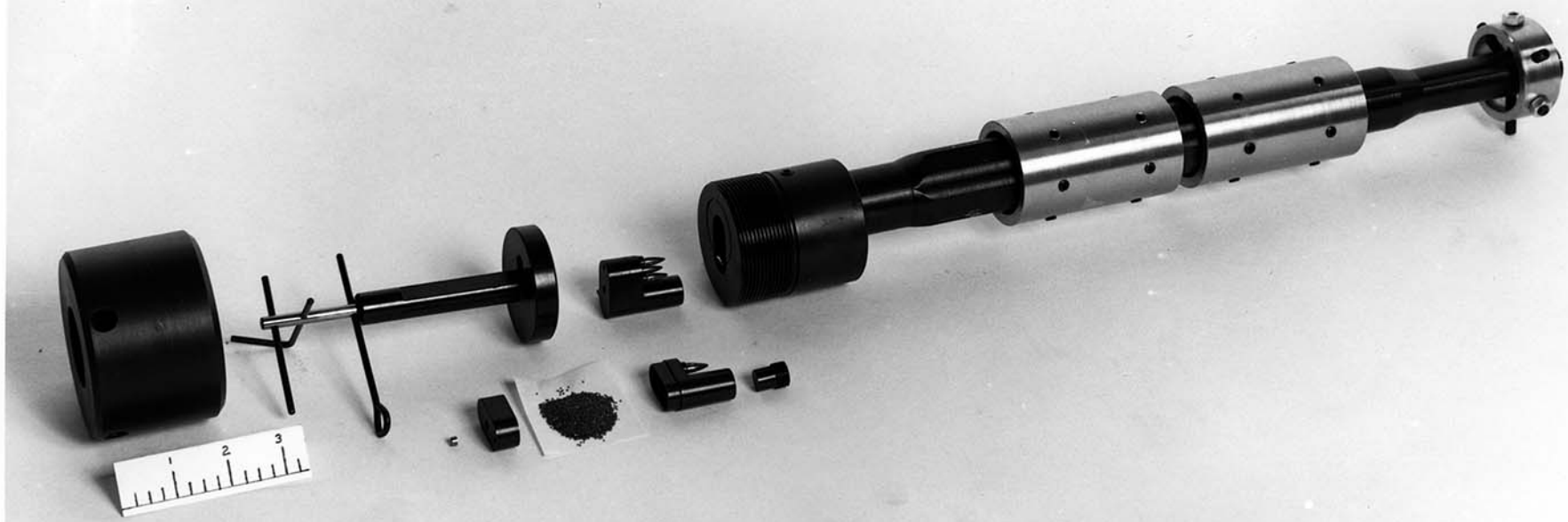
1
2
3

HOPPMANN CORPORATION
5410 PORT ROYAL ROAD
POST OFFICE BOX 1463
SPRINGFIELD, VA. 22151
703/321-8800 TELEX 89-9131

514 Fox Pavilion
Jenkintown, Pa. 19046

24 July 1978

Commanding General
ARRADCOM
Attn: DRDAR-PMP/S. Hadawanetz

Subject: Unsolicited Proposal, Tri-Bulleted, 4.32MM Folded Test System

Dear Ms. Hadawanetz:

During recent technical discussions at the ARRADCOM it was learned that a requirement exists to achieve an improved, multiple launch capability in advanced small caliber rifle systems. To date, most of the activity has been centered on "serially" fired systems. Present plans are to also include "SALVO" approaches to obtain the desired target effects.

With the advent of folded ammunition it is now possible to effectively accomplish fool-proof qualification and launch of a multiplicity of off-axis projectiles. See Figures 1 and 2. This proposal addresses the design and manufacture of a 4.32MM, triple bore, heavy walled test system. The system will provide capability to obtain preliminary interior, exterior and terminal ballistic information.

SYSTEM CHARACTERISTICS

Caliber ..... 4.32MM (each of 3 bores)
Projectile Travel ..... 19 Inches
Max. Chamber Pressure (Design) ..... 100K PSI
Launcher Material ..... Alloy Steel, 160K PSI Min. Y.S.
Fire Mode ..... Single Shot
Muzzle Velocity ..... 3700 FPS
Other: Remaining physical and performance characteristics for each projectile will be similar to the 4.32MM, full bore ammunition developed earlier at Frankford Arsenal.

The Hoppmann Corporation is uniquely qualified to perform the design and development work outlined herein. We have successfully accomplished similar tasks using the folded ammunition approach and can perform the outlined work in minimum time and least cost.

Automation | Systems Engineering and Consulting
Product Development • Manufacturing

PROGRAM

A - Engineering Design of Folded Test Cartridge and Test Fixture
B - Manufacture Test System (one fixture, 2 reuseable test cartridges)
C - Monitoring

Item A can be accomplished within two (2) weeks after receipt of authority.

Item B can be accomplished within four (4) weeks after approval of design by ARRADCOM project personnel.

Item C will be accomplished on an as-needed basis during government testing of the system.

COST $9900.00

GFM - 3 each, 4.32MM Accuracy Barrels

It is believed that this proposal would be of primary interest to project personnel in 455 Building, DRDAR-SCA.

We appreciate the opportunity to submit this proposal and will be happy to discuss any aspects of the program at your convenience.

Sincerely,

A. J. Grandy/for

C. W. Wheeler, Controller

AJG/bb

C/C C. W. Wheeler

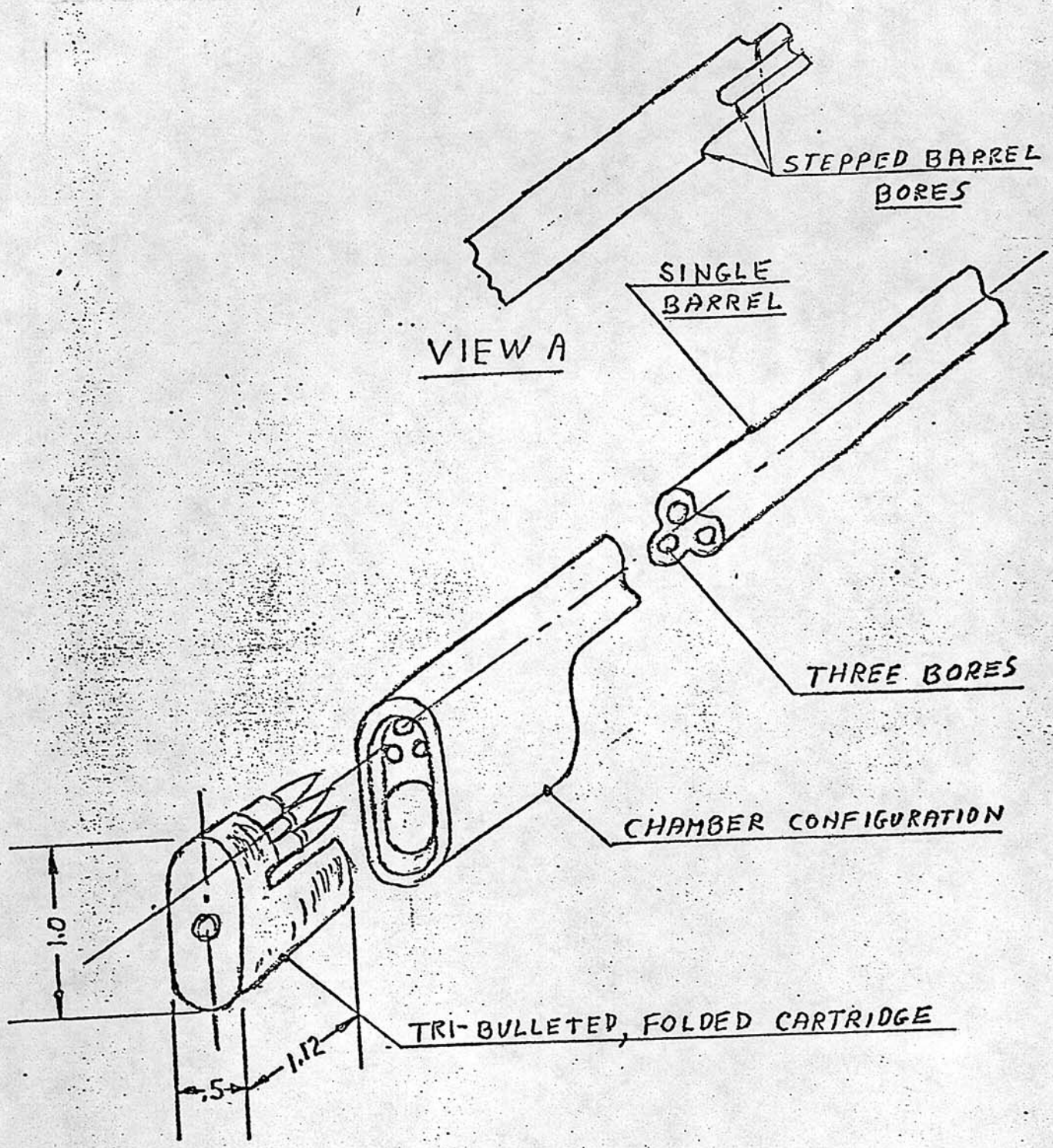

SYSTEM SCHEMATIC
TRI-BULLETED, 4.32 MM
ADVANCED RIFLE SYSTEM

FIG-1

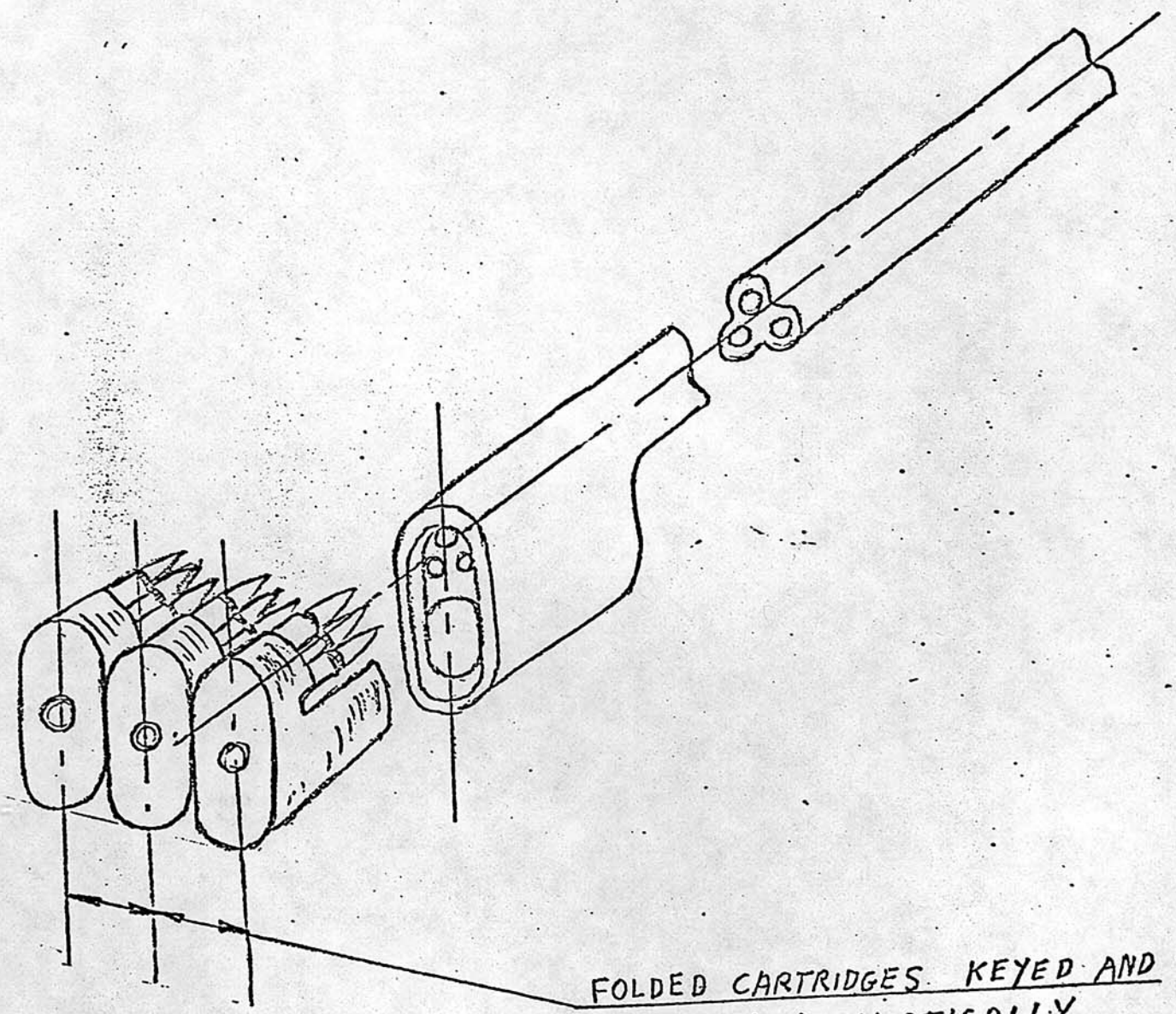

FOLDED CARTRIDGES KEYED AND QUALIFIED AUTOMATICALLY WITH TRI-BORED BARREL USING MAGAZINE OR 'CASSETTE'

CARTRIDGE 'QUALIFICATION'
TRI-BULLETED, 4.32 MM
ADVANCED RIFLE SYSTEM

Fig-2

DEPARTMENT OF THE ARMY
US ARMY ARMAMENT RESEARCH AND DEVELOPMENT COMMAND
DOVER, NEW JERSEY 07801

DRDAR-PMP

OCT 13 1978

RECEIVED
OCT 16 1978
HOPPMANN CORP.

Mr. C. W. Wheeler
Controller
Hoppmann Corporation
5410 Port Royal Road
PO Box 1463
Springfield, Virginia 22151

Dear Mr. Wheeler:

The evaluation of your unsolicited proposal, "Tri-Bulleted, 4.32mm Folded Test System," has been completed. The proposal is of interest to the Army and we expect contract action to be recommended. Until you receive official notification from our Procurement Directorate, correspondence relative to your proposal should be directed to the above address, ATTN: DRDAR-PMP, using your proposal's registration number, UN 245-78, as a reference. If you have questions you may call me on (201) 328-3047.

The preceding information is furnished only to make you aware of the status of your proposal and does not obligate the Government, nor does it in any way represent a commitment by or for this Command.

Your interest in the US Army's research and development program is appreciated. We would be pleased to evaluate any future proposals you submit.

Sincerely yours,

Sylvia Hadowanetz

SYLVIA HADOWANETZ
Unsolicited Proposals
Coordinator

55X

EL.PPD1279D105(PP3329M0079

ALIGN FIRST CHARACTER IN THIS BOX — TYPE THE WORD "ALIGN" TO REGISTER HERE → ALIGN

H-335 (TEST) (JUN 1972)

ORDER FOR SUPPLIES OR SERVICES

TRACT PURCH ORDER NO.	2. DELIVERY ORDER NO.	3. DATE OF ORDER	4. REQUISITION/PURCHASE REQUEST NO.	5. CERTIFIED FOR NATIONAL DEFENSE UNDER DOSA REG 2 AND DR OMS REG 1 RATING
DAAK11-79-M-0031		79JAN11	1AB555HHCCCM 1AB555HHCCCC	D0-C
K ALL PACKAGES & PAPERS WITH THIS NO.				IF "9", SEE SECT. K

ED BY CODE HH350KN
OP, ARRADCOM
ML/BALLISTICS PROC DIV
PG LEDGEWOOD AREA, MD 21010
UYER/SYMBOL: KERR/DRDAP-PRB-S
HONE: AC 301-671-2434

7. ADMINISTERED BY (If other than block 5) CODE S3901A
COMMANDER
DCASMA - PHILADELPHIA
P.O. BOX 7333
PHILADELPHIA, PA 19101

8. FOB SITE
FOB = S SOURCE
FOB = D DESTINATION
FOB = O INTERMED
OTHER = L (SEE SECT. E)

NTRACTOR CODE 68754 FACILITY CODE 68754 (If "9" FOR MULTIPLE FACILITIES SEE SECT. K.)
ME AND ADDRESS
OPPMAN CORP
24 FOX PAVILION
ENKINTOWN, PA 19045

10. TYPE CONTRACT U
10a. SECURITY CLASS

11. DISCOUNT FOR PROMPT PAYMENT

	%	DAYS	NET DAYS
1ST	N		N
2ND			OTHER
3RD			IF "9" SEE SECT. K

SERVED FOR SERVICE/AGENCY USE

13. PAYMENT WILL BE MADE BY CODE S3910A IF "9", SEE SECT. K
COMMANDER
DCAS REGION - PHILADELPHIA
P.O. BOX 7730
PHILADELPHIA, PA 19101

AIL INVOICES TO:
17

AST AY	KIND CONT	TYPE CONTR	16. ABSTRACT RECIP. ADP POINT	SPL CONT PROVISIONS	CONT ADMIN FUNC LMT	17. SUPPORT CAO	18. SVC/AGENCY USE ONLY	19. SURV CRIT	20. TOTAL AMOUNT OF ORDER
	P	U	S3910A			S3910A	X4P	C	$19,900.00

PROPRIATION AND ACCOUNTING DATA

ACC'G ASS REF	APPROPRIATION	LIMIT SUBHEAD	SUPPLEMENTAL ACCOUNTING CLASSIFICATION
AA	21 X4997	0152	LK 2570 S28017

N-CLIN/ELIN PAYMENT PROV	CPN RECIPIENT DODAAD	OBLIGATED AMOUNT	SVC AGENCY USE ONLY
	S3910A	$19,900.00	36527000204

DELIVERY — This delivery order is subject to instructions contained on this side of form only and is issued on another Government agency or in accordance with and subject to terms and conditions of above numbered contract.

URCHASE X — Reference your QUOTATION DATED 28 DEC 28

Furnish the following on terms specified herein, including, for U S purchases, General Provisions of Purchase Order on DD Form 1155r (EXCEPT CLAUSE NO 13 APPLIES ONLY IF THIS BOX ☐ KED, AND NO 15 IF THIS BOX ☐ IS CHECKED); special provisions _____ and delivery as indicated This purchase is negotiated under authority of 10 USC 2304(a)(3) or as specified chedule if within the U S, its possessions or Puerto Rico, if otherwise, under 2304(a)(6)

checked, Additional General Provisions apply, supplier shall sign "Acceptance" on DD Form 1155r and return copies

quantity accepted by the Government is ne as quantity ordered, indicated by ✓ rk If different enter actual quantity epted below quantity ordered and encircle

24. UNITED STATES OF AMERICA
BY: MELVIN SILVERMAN CONTRACTING ORDERING OFFICER

25. TOTAL
29. DIFFERENCES

UANTITY ORDERED HAS BEEN
☐ INSPECTED ☐ RECEIVED ☐ ACCEPTED, AND CONFORMS TO THE CONTRACTS EXCEPT AS STATED

27. SHIP NO.
28. D.O. VOUCHER NO.
30. INITIALS

☐ PARTIAL ☐ FINAL

32. PAID BY
33. AMOUNT VERIFIED CORRECT FOR

DATE SIGNATURE OF AUTHORIZED GOVERNMENT REPRESENTATIVE

31. PAYMENT ☐ COMPLETE ☐ PARTIAL ☐ FINAL

34. CHECK NUMBER

certify this account is correct and proper for payment.

35. BILL OF LADING NO.

SIGNATURE AND TITLE OF CERTIFYING OFFICER

CEIVED AT | 38. RECEIVED BY | 39. DATE RECEIVED | 40. TOTAL CONTAINERS | 41. S/R ACCOUNT NUMBER | 42. S/R VOUCHER NO.

ARAGRAPH APPLIES ONLY TO QUOTATIONS SUBMITTED:

s are of domestic origin unless otherwise indicated by quoter. The Government reserves the o consider quotations or modifications thereof received after the date indicated should such be in the interest of the Government. This is a request for information and quotations ed are not offers. When quoting, complete blocks 11, 12, 22, 23, 25. If you are unable to please advise. This request does not commit the Government to pay any cost incurred in ation or the submission of this quotation or to procure or contract for supplies or services.

GENERAL PROVISIONS

PECTION AND ACCEPTANCE - Inspection and acceptance will be at destination, unless ise provided. Until delivery and acceptance, and after any rejections, risk of loss will be on the ctor unless loss results from negligence of the United States Government. Notwithstanding the ements for any Government inspection and test contained in specifications applicable to this ct, except where specialized inspections or tests are specified for performance solely by the nment, the Contractor shall perform or have performed the inspections and tests required to ntrate that the supplies and services provided under the contract conform to the drawings, cations and contract requirements listed herein, including if applicable the technical ements for the manufacturers' part numbers specified herein.

ARIATION IN QUANTITY - No variation in the quantity of any item called for by this ct will be accepted unless such variation has been caused by conditions of loading, shipping, or ng, or allowances in manufacturing processes, and then only to the extent, if any, specified here in this contract.

AYMENTS - Invoices shall be submitted in quadruplicate *(one copy shall be marked "Original")* s otherwise specified, and shall contain the following information: Contract or Order number, number, contract description of supplies or services, sizes, quantities, unit prices and extended . Bill of lading number and weight of shipment will be shown for shipments on Government of Lading. Unless otherwise specified, payment will be made on partial deliveries accepted by the rnment when the amount due on such deliveries so warrants.

ISCOUNTS - In connection with any discount offered, time will be computed from date of ery of the supplies to carrier when acceptance is at the point of origin, or from date of delivery stination or port of embarkation when delivery and acceptance are at either of these points, or the date the correct invoice or voucher is received in the office specified by the Government, if atter is later than date of delivery. Payment is deemed to be made for the purpose of earning the ount on the date of mailing of the Government check.

DISPUTES - (a) Except as otherwise provided in this contract, any dispute concerning a question act arising under this contract which is not disposed of by agreement shall be decided by the tracting Officer, who shall mail or otherwise furnish a copy thereof to the Contractor. This sion shall be final and conclusive unless, within 30 days from the date of receipt of such copy, the tractor mails or otherwise furnishes to the Contracting Officer a written appeal addressed to the etary. The decision of the Secretary or his duly authorized representative for the determination uch appeals shall be final and conclusive unless determined by a court of competent jurisdiction have been fraudulent, or capricious, or arbitrary, or so grossly erroneous as necessarily to imply faith, or not supported by substantial evidence. The Contractor shall be afforded an opportunity be heard and to offer evidence in support of his appeal. Pending final decision of a dispute eunder, the Contractor shall proceed diligently with the performance of the contract and in ordance with the Contracting Officer's decision. (b) This "Disputes" clause does not preclude nsideration of law questions in connection with decisions provided for in (a) above, provided, that hing in this contract shall be construed as making final the decision of any administrative official, resentative, or board on a question of law.

FOREIGN SUPPLIES - This contract is subject to the Buy American Act *(41 U.S.C. 10a-d)* as plemented by Executive Order 10582 of December 17, 1954, and any restrictions in appropriation s on the procurement of foreign supplies.

CONVICT LABOR - The Contractor agrees not to employ for work under this contract any son undergoing sentence of imprisonment at hard labor.

OFFICIALS NOT TO BENEFIT - No member of or Delegate to Congress or resident mmissioner, shall be admitted to any share or part of this contract, or to any benefit that may arise erefrom, but this provision shall not be construed to extend to this contract if made with a rporation for its general benefit.

COVENANT AGAINST CONTINGENT FEES - The Contractor warrants that no person or ling agency has been employed or retained to solicit or secure this contract upon an agreement or derstanding for a commission, percentage, brokerage, or contingent fee, excepting bona fide ployees or bona fide established commercial or selling agencies maintained by the Contractor for e purpose of securing business. For breach or violation of this warranty the Government shall have e right to annul this contract without liability or in its discretion to deduct from the contract price consideration or otherwise recover, the full amount of such commission, percentage, brokerage or ntingent fee.

D GRATUITIES - (a) The Government may, by written notice to the Contractor, terminate the ght of the Contractor to proceed under this contract if it is found after notice and hearing, by the ecretary or his duly authorized representative, that gratuities *(in the form of entertainment, gifts or therwise)* were offered or given by the Contractor, or any agent or representative of the Contractor, to ny officer or employee of the Government with a view toward securing a contract or securing avorable treatment with respect to the awarding or amending, or the making of any determinations ith respect to the performing of such contract, provided, that the existence of the facts upon which he Secretary or his duly authorized representative makes such findings shall be in issue and may be eviewed in any competent court. (b) In the event this contract is terminated as provided in paragraph a) hereof the Government shall be entitled (i) to pursue the same remedies against the Contractor as t could pursue in the event of a breach of the contract by the Contractor and (ii) as a penalty in ddition to any other damages to which it may be entitled by law to exemplary damages in an mount *(as determined by the Secretary or his duly authorized representative)* which shall be not less han three nor more than ten times the costs incurred by the Contractor in providing any such ratuities to any such officer or employee. (c) The rights and remedies of the Government provided in his clause shall not be exclusive and are in addition to any other rights and remedies provided by law or under this contract.

11. RENEGOTIATION - This contract, and any subcontract hereunder, is subject to the Renegotiation Act of 1951, as amended *(50 U.S.C. App. 1211 et seq.)* and shall be deemed to contain all the provisions required by Section 104 thereof, and is subject to any subsequent act of Congress providing for the renegotiation of contracts.

12. CONDITION FOR ASSIGNMENT - This Purchase Order may not be assigned pursuant to the Assignment of Claims Act of 1940, as amended *(31 U.S.C. 203, 41 U.S.C. 15)*, unless or until the supplier has been requested and has accepted this order by executing the Acceptance hereon.

13. COMMERCIAL WARRANTY - The Contractor agrees that the supplies or services furnished under this contract shall be covered by the most favorable commercial warranties the Contractor gives to any customer for such supplies or services and that the rights and remedies provided herein are in addition to and do not limit any rights afforded to the Government by any other clause of this contract.

14. PRIORITIES, ALLOCATIONS AND ALLOTMENTS DEFENSE MATERIALS SYSTEM - When the amount of the order is $500 or more the Contractor shall follow the provisions of DMS Reg. 1 and all other applicable regulations and orders of the Business and Defense Services Administration in obtaining controlled materials and other products and materials needed to fill this order.

15. FAST PAYMENT PROCEDURE –

(a) General. This is a fast payment order. Invoices will be paid on the basis of the Contractor's delivery to a post office, common carrier, or, in shipment by other means, to the point of first receipt by the Government.

(b) Responsibility for Supplies. Title to the supplies shall vest in the Government upon delivery to a post office or common carrier for shipment to the specified destination. If shipment is by means other than post office or common carrier, title to the supplies shall vest in the Government upon delivery to the point of first receipt by the Government. Notwithstanding any other provision of the purchase order, the Contractor shall assume all responsibility and risk of loss for supplies (i) not received at destination, (ii) damaged in transit, or (iii) not conforming to purchase requirements. The Contractor shall either replace, repair, or correct such supplies promptly at his expense, *provided* instructions to do so are furnished by the Contracting Officer within ninety (90) days from the date title to the supplies vests in the Government.

(c) Preparation of Invoice.

(1) Upon delivery of supplies to a post office, common carrier, or in shipments by other means, the point of first receipt by the Government, the Contractor shall prepare an invoice in accordance with Clause 3 of the General Provisions of Purchase Order, except that invoices under a blanket purchase agreement shall be prepared in accordance with the provisions of the agreement. In shipments by either post office or common carrier, the Contractor shall either (A) cite on his invoice the date of shipment, name and address of carrier, bill of lading number or other shipment document number, or (B) attach copies of such documents to his invoice as evidence of shipment. In addition the invoice shall be prominently marked "Fast Pay." In case of delivery by other than post office or common carrier, a receipted copy of the Contractor's delivery document shall be attached to the invoice as evidence of delivery.

(2) If the purchase price excludes the cost of transportation, the Contractor shall enter the prepaid shipping cost on the invoice as a separate item. The cost of parcel post insurance will not be paid by the Government. If transportation charges are separately stated on the invoice, the Contractor agrees to retain related paid freight bills or other transportation billings paid separately f... a period of three years and to furnish such bills to the Government when requested for aud... purposes.

(d) Certification of Invoice. The Contractor agrees that the submission of an invoice to the Government for payment is a certification that the supplies for which the Government is being billed have been shipped or delivered in accordance with shipping instructions issued by the ordering officer, in the quantities shown on the invoice, and that such supplies are in the quantity and of the quality designated by the cited purchase order.

OUTER SHIPPING CONTAINERS SHALL BE MARKED "FAST PAY"

16. *(This clause applies if this contract is for services and is not exempted by applicable regulations of the Department of Labor.)*

SERVICE CONTRACT ACT OF 1965 - Except to the extent that an exemption, variation, or tolerance would apply pursuant to 29 CFR 4.6 if this were a contract in excess of $2,500, the Contractor and any subcontractor hereunder shall pay all of his employees engaged in performing work on the contract not less than the minimum wage specified under section 6(a)(1) of the Fair Labor Standards Act of 1938, as amended ($1.60 per hour). However, in cases where section 6(e)(2) of the Fair Labor Standards Act of 1938 is applicable, the rates specified therein will apply. All regulations and interpretations of the Service Contract Act of 1965 expressed in 29 CFR Part 4 are hereby incorporated by reference in this contract.

ADDITIONAL GENERAL PROVISIONS

17. CHANGES - The Contracting Officer may at any time, by a written order, and without notice to the sureties, make changes, within the general scope of this contract, in (i) drawings, designs, or specifications, where the supplies to be furnished are to be specially manufactured for the Government in accordance therewith; (ii) method of shipment or packing, and (iii) place of delivery. If any such change causes an increase or decrease in the cost of, or the time required for performance of this contract, whether changed or not changed by any such order, an equitable adjustment shall be made by written modification of this contract. Any claim by the Contractor for adjustment under this clause must be asserted within 30 days from the date of receipt by the Contractor of the notification of change provided that the Contracting Officer, if he decides that the facts justify such action, may receive and act upon any such claim if asserted prior to final payment under this contract. Failure to agree to any adjustment shall be a dispute concerning a question of fact within the meaning of the clause of this contract entitled "Disputes." However, nothing in this clause shall excuse the Contractor from proceeding with the contract as changed.

18. TERMINATION FOR DEFAULT - The Contracting Officer, by written notice, may terminate this contract, in whole or in part, for failure of the Contractor to perform any of the provisions hereof. In such event, the Contractor shall be liable for damages, including the excess cost of reprocuring similar supplies or services; provided that, if (i) it is determined for any reason that the Contractor was not in default or (ii) the Contractor's failure to perform is without his and his subcontractor's control, fault or negligence, the termination shall be deemed to be a termination for convenience under paragraph 19. As used in this provision the term "subcontractor" and "subcontractors" means subcontractors at any tier.

19. TERMINATION FOR CONVENIENCE - The Contracting Officer, by written notice, may terminate this contract, in whole or in part, when it is in the best interest of the Government. If this contract is for supplies and is so terminated, the Contractor shall be compensated in accordance with Section VIII of the Armed Services Procurement Regulation, in effect on this contract's date. To the extent that this contract is for services and is so terminated, the Government shall be liable only for payment in accordance with the payment provisions of this contract for services rendered prior to the effective date of termination.

20. ASSIGNMENT OF CLAIMS - Claims for monies due or to become due under this contract shall be assigned only pursuant to the Assignment of Claims Act of 1940, as amended *(31 U.S.C. 203, 41 U.S.C. 15)*. However, payments to an assignee of monies under this contract shall not, to the extent provided in said Act, as amended, be subject to reduction or set-off. *(See Clause 12.)*

ACCEPTANCE

The Contractor hereby accepts the offer represented by this numbered purchase order as it may previously have been or is now modified, subject to all of the terms and conditions set forth, and agrees to perform the same.

NAME OF CONTRACTOR: HOPPMANN CORPORATION

SIGNATURE: Charles W. Wheeler

TYPED NAME AND TITLE: Charles W. Wheeler, Controller

DATE SIGNED: 12-28-78

...NAS

MUAP FORM 69S (TEST) (REV) (JUN 72)	CONTINUATION SHEET	PROC INSTR IDENT NO	MOD/ORDER NO.	PAGE	OF
		DAAK11-79-M-0071		3	6

PART II SECTION E & H
SERVICES LINE ITEM DATA

ITEM NO.	DESCRIPTION OF SERVICES	COMPLETION DATE	TOTAL ITEM AMOUNT *
001	ENGINEERING SERVICES	79MAR12	89,900.00

ACRN	SVC/AGENCY USE ONLY	ITEM/PROJ MGR
AA	AA255UU6GGGH JAA255UU6GGGG	

DESCRIPTIVE DATA:

ENGINEERING SERVICES TO DESIGN AND FABRICATE A FOLDED AMMUNITION SYSTEM.

ITEM NO.	DESCRIPTION OF SERVICES	COMPLETION DATE	TOTAL ITEM AMOUNT *

ACRN	SVC/AGENCY USE ONLY	ITEM/PROJ MGR

DESCRIPTIVE DATA:

ITEM NO.	DESCRIPTION OF SERVICES	COMPLETION DATE	TOTAL ITEM AMOUNT *

ACRN	SVC/AGENCY USE ONLY	ITEM/PROJ MGR

DESCRIPTIVE DATA:

ITEM NO.	DESCRIPTION OF SERVICES	COMPLETION DATE	TOTAL ITEM AMOUNT *

ACRN	SVC/AGENCY USE ONLY	ITEM/PROJ MGR

DESCRIPTIVE DATA:

ITEM NO.	DESCRIPTION OF SERVICES	COMPLETION DATE	TOTAL ITEM AMOUNT *

ACRN	SVC/AGENCY USE ONLY	ITEM/PROJ MGR

DESCRIPTIVE DATA:

* REPRESENTS NET AMOUNT OF INCREASE/DECREASE WHEN MODIFYING EXISTING ITEM NOS.

ESTIMATED

OR CONTRACTOR
Hoppman Corporation

SUPPLIES/SERVICES	QUANTITY	UNIT	UNIT PRICE	AMOUNT
RON: 1A855544GGGW				
ngineering Services consisting of the ollowing:	1	lot	$9,900.00	$9,900.00

. Design and fabrication of a 4.32MM, triple ore, heavy walled test system. The system will ave the ability to provide, under instrumented onditions, interior, exterior, and terminal allistics data

. Design and fabricate two reusable test artridges of a "folded" configuration. The olded cartridge will be capable of allowing insertion of three 4.32 MM projectiles.

. System Characteristics. The design of the asic test fixture should provide for the ollowing characteristics:

Caliber	4.32 MM(each of 3 bores)
Projectile travel	19 inches
Maximum Chamber Pressure	1000 PSI
Launcher Material	Alloy steel, 16 OK PSI Min YS
Fire Mode	Single shot
Muzzle Velocity	3700 FPS

Other: Remaining physical and performance characteristics for each projectile will be similar to the 4.32mm full bore ammunition developed earlier at Frankford Arsenal.

d. The work is to be completed within a period of eight working weeks from date of award.

e. The contractor shall deliver all fabricated items at completion to:

F.O.B. Destination
Weapons Systems Concept Team
ATTN: Mr. Abraham Filatau
Bldg. E3516
Aberdeen Proving Ground, (Edgewood Area), MD 21010

f. The following listed General Provisions incorporated herein and attached hereto:

Source Reference	Clause Title	Clause Date
7-103.28	Affirmative Action for Handicapped Workers	76 MAY

PART III--SECTION I--GENERAL PROVISIONS

AFFIRMATIVE ACTION FOR HANDICAPPED WORKERS (ASPR 7-103.26) (1976 MAY)

(a) The Contractor will not discriminate against any employee or applicant for employment because of physical or mental handicap in regard to any position for which the employee or applicant for employment is qualified. The Contractor agrees to take affirmative action to employ, advance in employment, and otherwise treat qualified handicapped individuals without discrimination based upon either physical or mental handicap in all employment practices such as the following: employment, upgrading, demotion or transfer, recruitment, advertising, layoff or termination, rates of pay or other forms of compensation, and selection for training including apprenticeship.
(b) The Contractor agrees to comply with the rules, regulations, and relevant orders of the Secretary of Labor issued pursuant to the Act.
(c) In the event of the Contractor's noncompliance with the requirements of this clause, action for noncompliance may be taken in accordance with the rules, regulations, and relevant orders of the Secretary of Labor issued pursuant to the Act.
(d) The Contractor agrees to post in conspicuous places available to employees and applicants for employment, notices in a form to be prescribed by the Director, provided by or through the Contracting Officer. Such notices shall state the Contractor's obligation under the law to take affirmative action to employ and advance in employment qualified handicapped employees and applicants for employment and the rights of applicants and employees.
(e) The Contractor will notify each labor union or representative of workers with which it has a collective bargaining agreement or other contract understanding that the Contractor is bound by the terms of Section 503 of the Rehabilitation Act of 1973 and is committed to take affirmative action to employ and advance in employment physically and mentally handicapped individuals.
(f) The Contractor will include the provisions of this clause in every subcontract or purchase order of $2,500 or more unless exempted by rule, regulations, or orders of the Secretary issued pursuant to Section 503 of the Act so that such provisions will be binding upon each subcontractor or vendor. The Contractor will take such action with respect to any subcontract or purchase order as the Director of the Office of Federal Contract Compliance Programs may direct to enforce such provisions, including action for noncompliance.

REPRESENTATIONS AND CERTIFICATIONS

he Quoter represents and certifies as part of his quotation that: (Check or complete all applicable boxes or blocks.)

SMALL BUSINESS

He ☒ is, ☐ is not, a small business concern. A small business concern for the purpose of Government ocurement is a concern, including its affiliates, which is independently owned and operated, is not dominant the field of operation in which it is quoting on Government contracts, and can further qualify under the criteria oncerning number of employees, average annual receipts, or other criteria, as prescribed by the Small Business dministration. (See Code of Federal Regulations, Title 13, Part 121, as amended, which contains detailed dustry definitions and related procedures.) If the quoter is a small business concern and is not the manufacrer of the supplies offered, he also represents that all supplies to be furnished hereunder ☐ will, ☐ will not, e manufactured or produced by a small business concern in the United States, its possessions, or Puerto Rico.

REGULAR DEALER-MANUFACTURER (Applicable only to supply contracts exceeding $10,000.)
He is a ☐ regular dealer in, ☒ manufacturer of, the supplies offered.

CERTIFICATION OF INDEPENDENT PRICE DETERMINATION (Applicable only to quotations in excess of $2,500 & solicitation is expected to result in firm fixed price contract or fixed price w/economic price adjustment provisions. (ASPR 1-115)

(a) By submission of this quotation, the quoter certifies, and in the case of a joint quotation, each party hereto certifies as to its own organization, that in connection with this procurement:

(1) the prices in this quotation have been arrived at independently, without consultation, communication, or agreement, for the purpose of restricting competition, as to any matter relating to such prices with any other quoter or with any competitor;

(2) unless otherwise required by law, the prices which have been quoted in this quotation have not been knowingly disclosed by the quoter and will not knowingly be disclosed by the quoter prior to opening in the case of an advertised procurement or prior to award in the case of a negotiated procurement, directly or indirectly to any other quoter or to any competitor; and

(3) no attempt has been made or will be made by the quoter to induce any other person or firm to submit or not to submit a quotation for the purpose of restricting competition.

(b) Each person signing this quotation certifies that

(1) he is the person in the quoter's organization responsible within that organization for the decision as to the prices being quoted herein and that he has not participated, and will not participate, in any action contrary to (a)(1) through (a)(3) above; or

(2)(i) He is not the person in the quoter's organization responsible within that organization for the decision as to the prices being quoted herein but that he has been authorized in writing to act as agent for the persons responsible for such decision in certifying that such persons have not participated, and will not participate, in any action contrary to (a)(1) through (a)(3) above, and as their agent does hereby so certify; and (ii) he has not participated, and will not participate, in any action contrary to (a)(1) through (a)(3) above.

(c) This certification is not applicable to a foreign quoter submitting a quotation for a contract which requires performance or delivery outside the United States, its possessions, and Puerto Rico.

(d) A quotation will not be considered for award where (a)(1), (a)(3), or (b) above has been deleted or modified. Where (a)(2) above has been deleted or modified, the quotation will not be considered for award unless the quoter furnishes with his quotation a signed statement which sets forth in detail the circumstances of the disclosure and the head of the Agency, or his designee, determines that such disclosure was not made for the purpose of restricting competition.

*U. S. GOVERNMENT PRINTING OFFICE: 1966 O—239-655

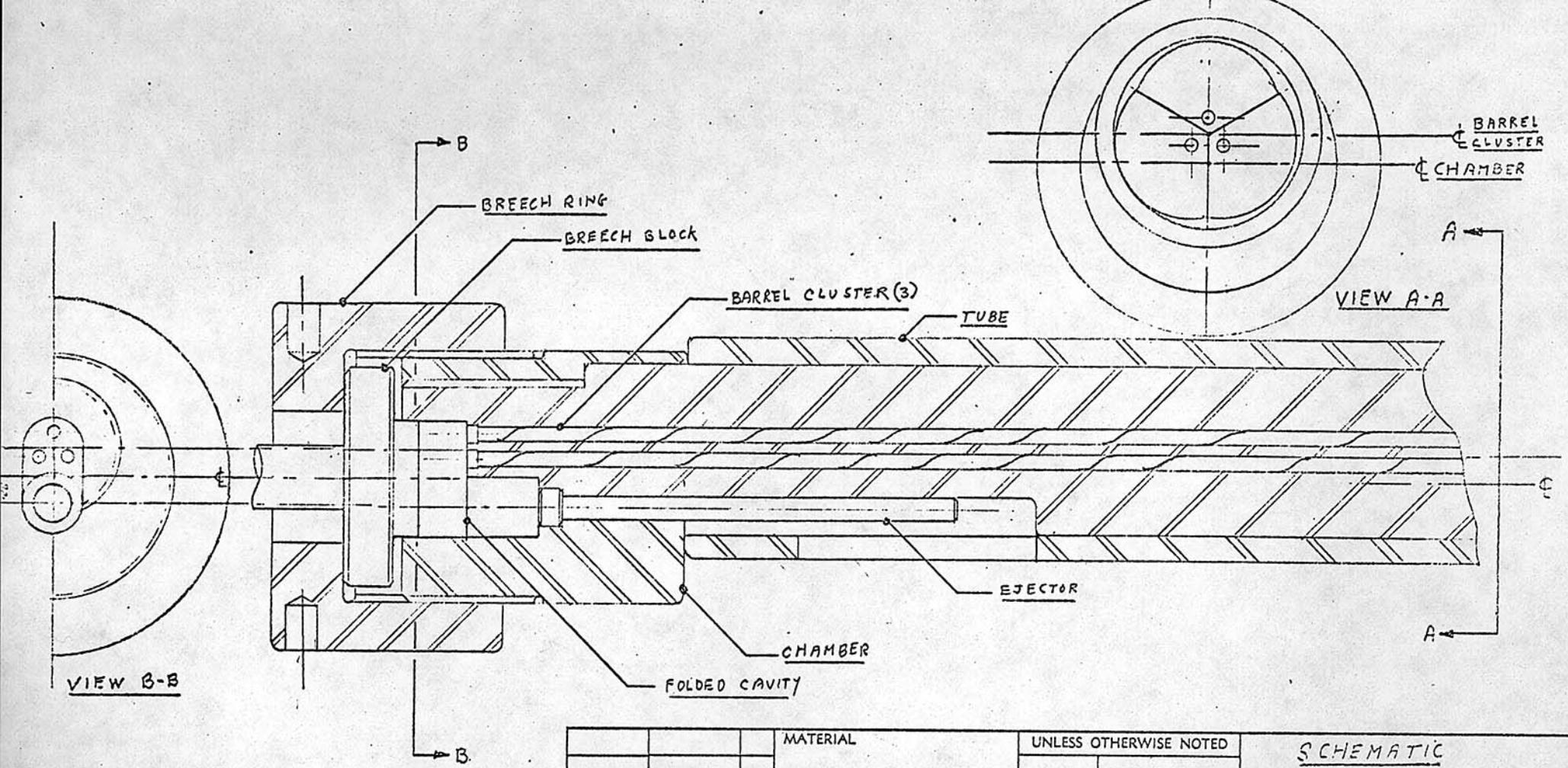

			MATERIAL				
			FINISH				
			SIGNATURE	DATE	SIGNATURE	DATE	
TOP ASSY	NEXT ASSY	QTY	DR	6/26/79	CH		
APPLICATION			EN		AP		

UNLESS OTHERWISE NOTED

√

REMOVE BURRS & SHARP EDGES

TOLERANCES

ANGLES ± ¼°

FRACT. ± 1/32

DECIMALS

.X ± .030

.XX ± .015

.XXX ± .005

SCHEMATIC

4.32 MM TRI-BULLET

FOLDED TEST SYSTEM

HOPPMANN CORP.

5410 PORT ROYAL ROAD

SPRINGFIELD, VA.

SCALE	DWG. NO.	REV.
NO-	C-2910.3 J	

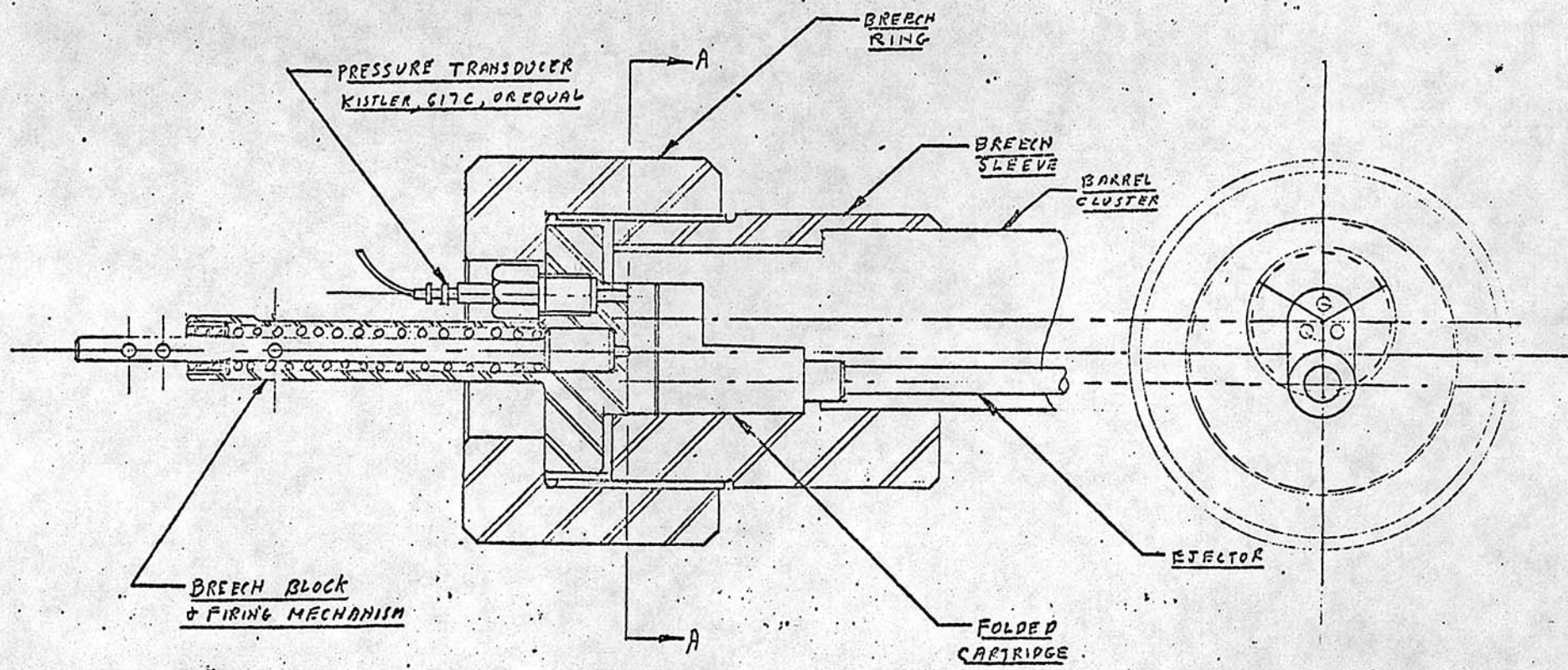

VIEW A-A
WITH CARTRIDGE REMOVED

ASSEMBLY, CHAMBER END, 4.32 MM TRI-BULLET TEST SYSTEM

A. J. Grandy
29 JAN, 1979

HOPPMANN CORPORATION
5410 PORT ROYAL RD.
POST OFFICE BOX 1453
SPRINGFIELD, VA. 22151

B-29108 J

NO SCALE

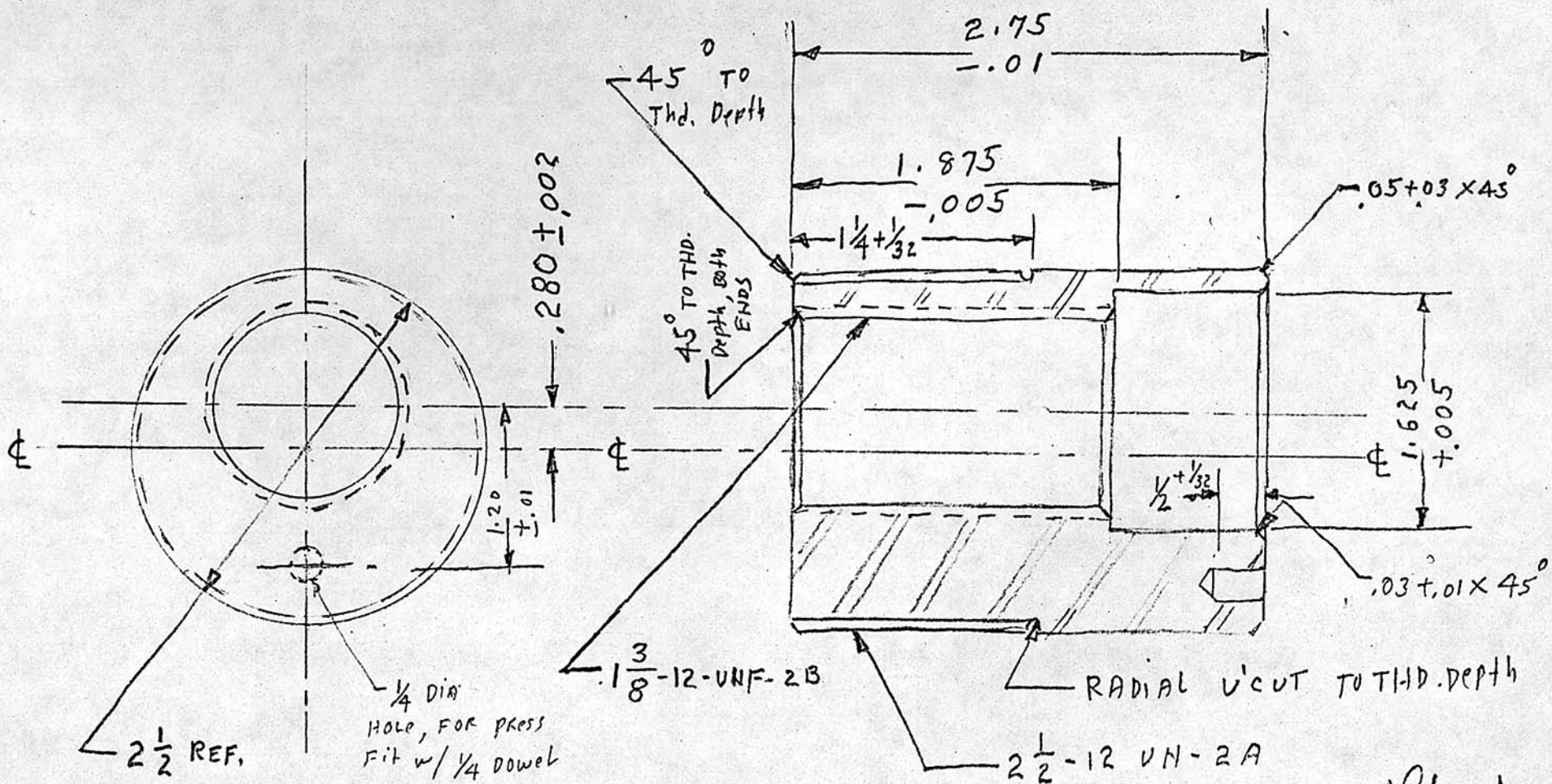

a J Grand
2 FEB, 1979

Matl, - Alloy Steel, Rc.35/38
BEFORE MACHINING
Finish - BLACK OXIDE

CHAMBER SLEEVE

HOPPMANN
CORPORATION

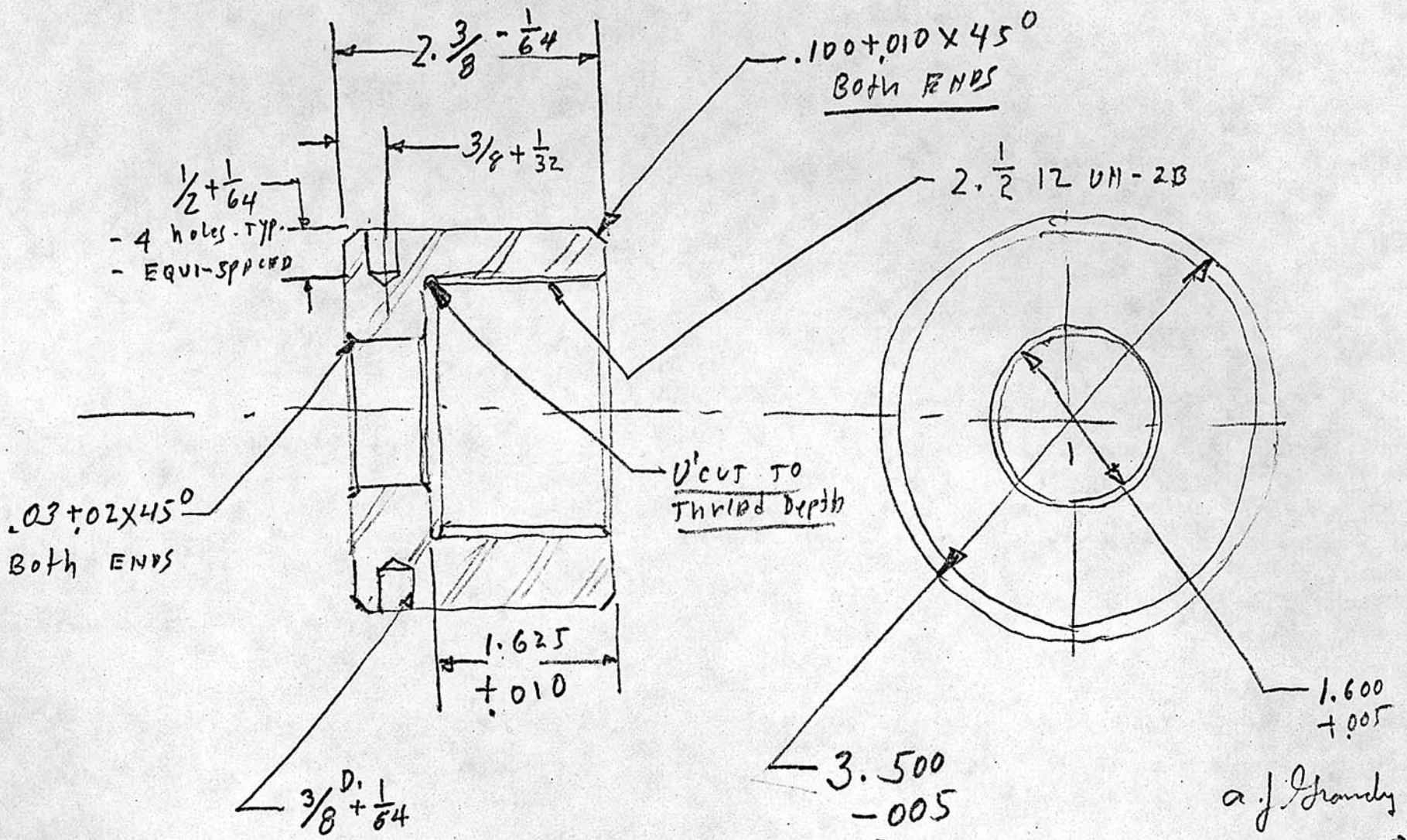

a. J. Grandy
31 JAN. 1979

BREECH RING

MAT'L - Alloy Steel, Rc-35/38
BEFORE MACHINING
FINISH - BLACK OXIDE

HOPPMANN CORPORATION

No Scale

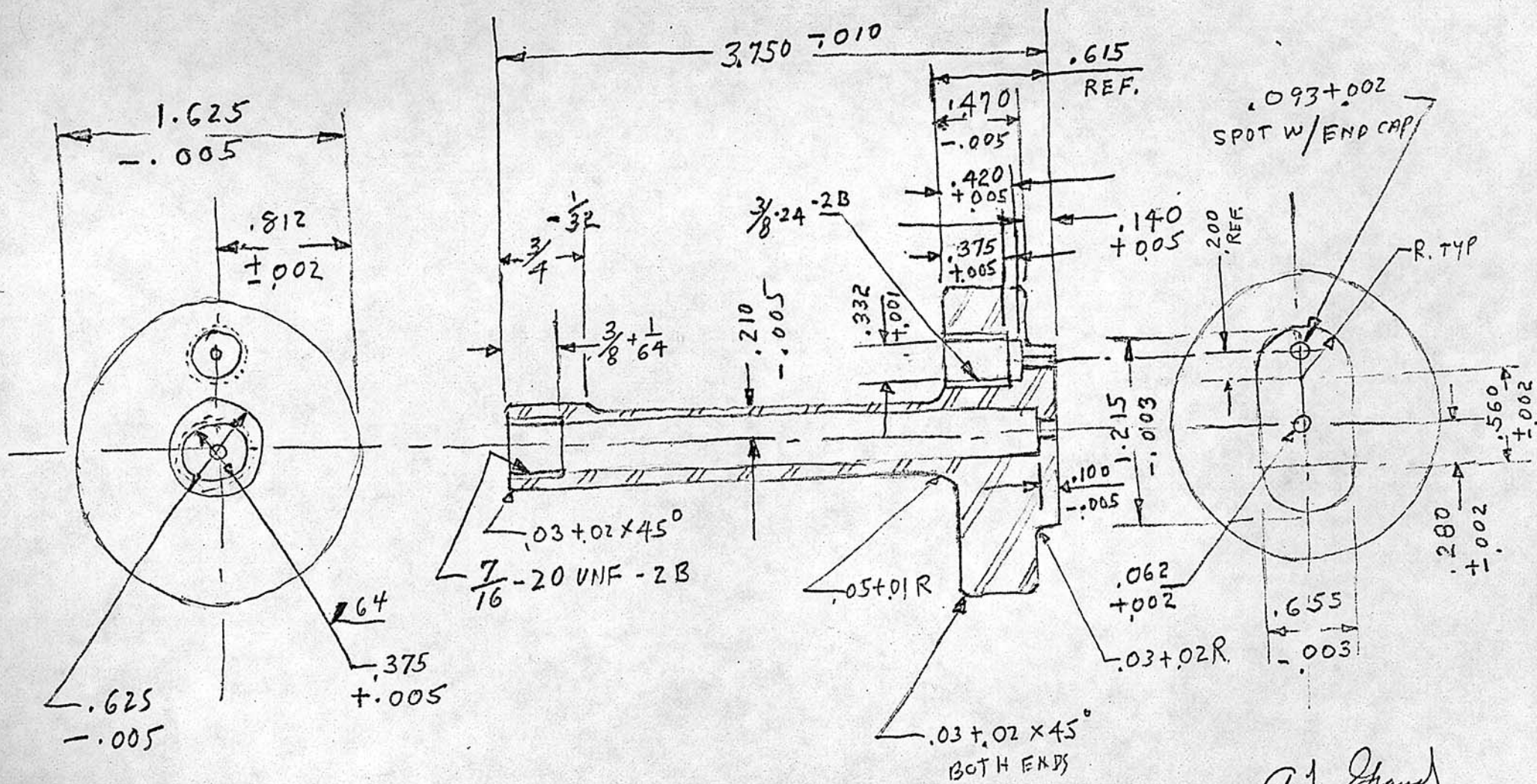

BREECH BLOCK

A. J. Grand
2 Feb. 1979

Matl - Alloy Steel Rc. 35/38
BEFORE MACHINING
Finish - BLACK OXIDE

HOPPMANN
CORPORATION

NO SCALE

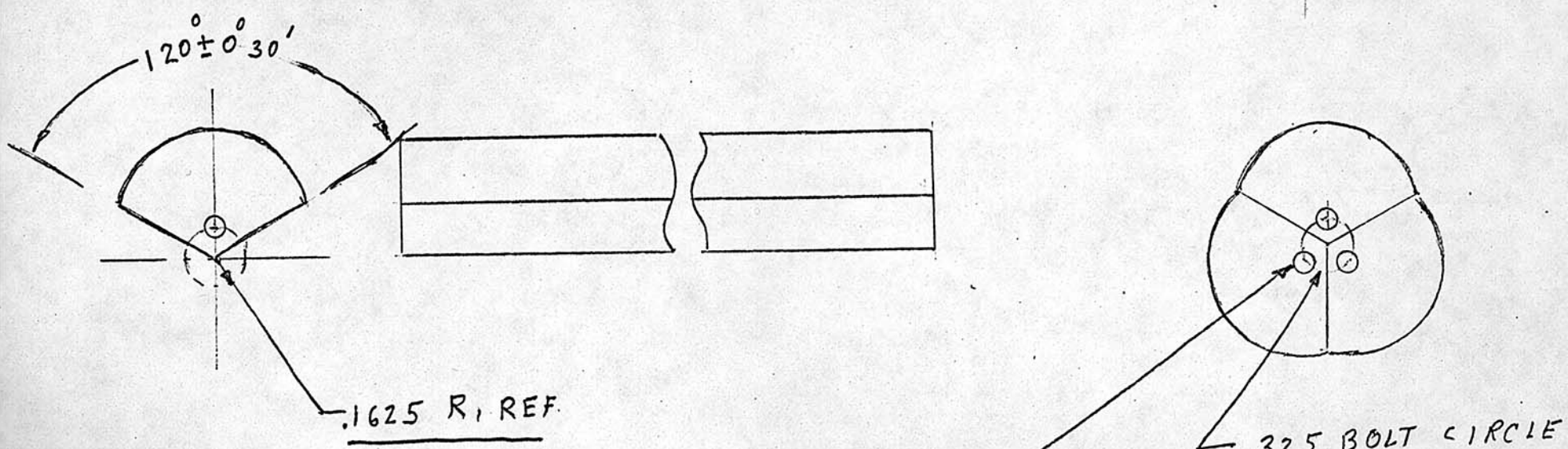

A.J. Handy
31 JAN, 1979

MATERIAL: GFM,
3 BARRELS

FINISH - BLACK OXIDE

4.32 MM BARRELS, MACHINED

HOPPMANN CORPORATION

NO SCALE

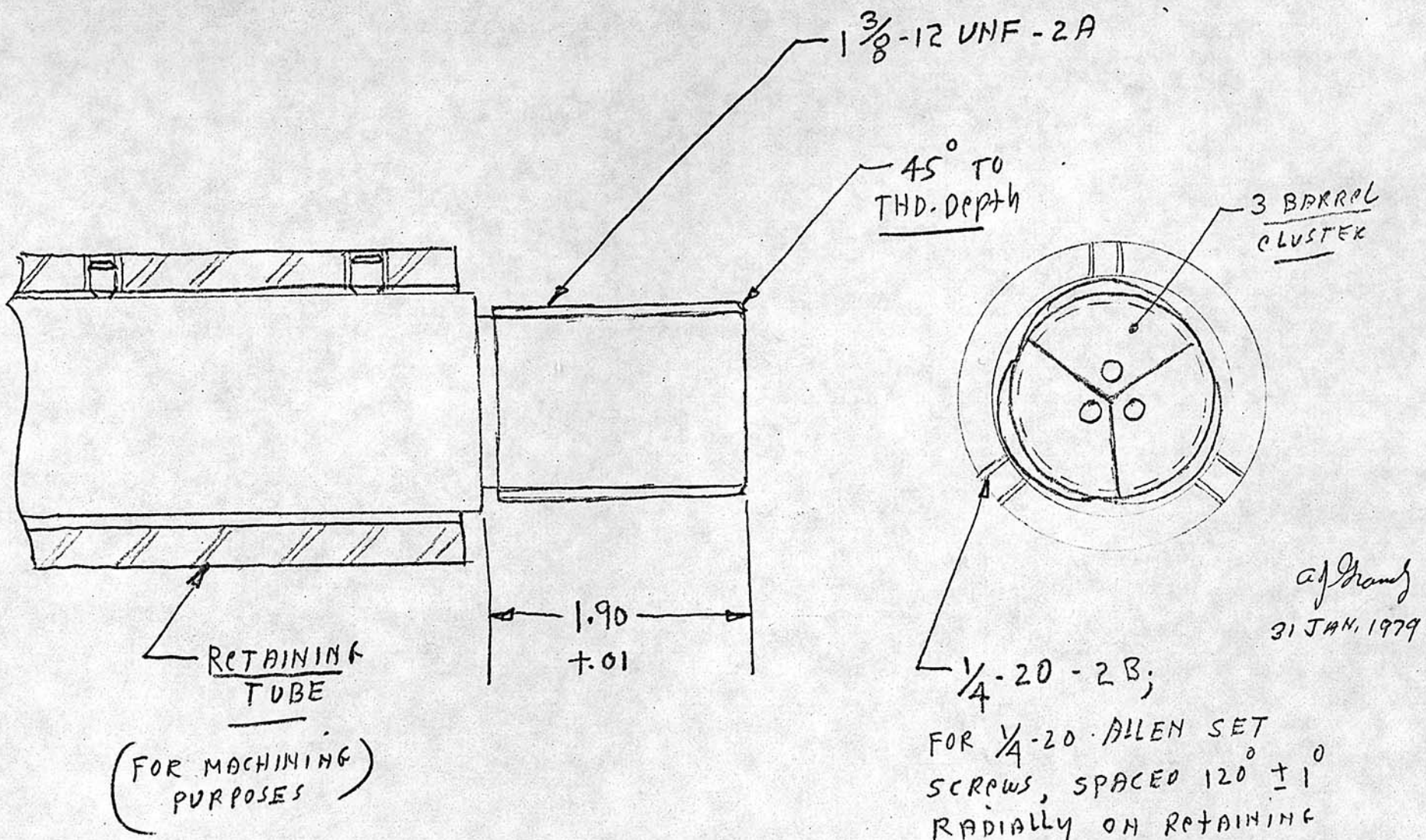

BARREL CLUSTER; THREADED

HOPPMANN

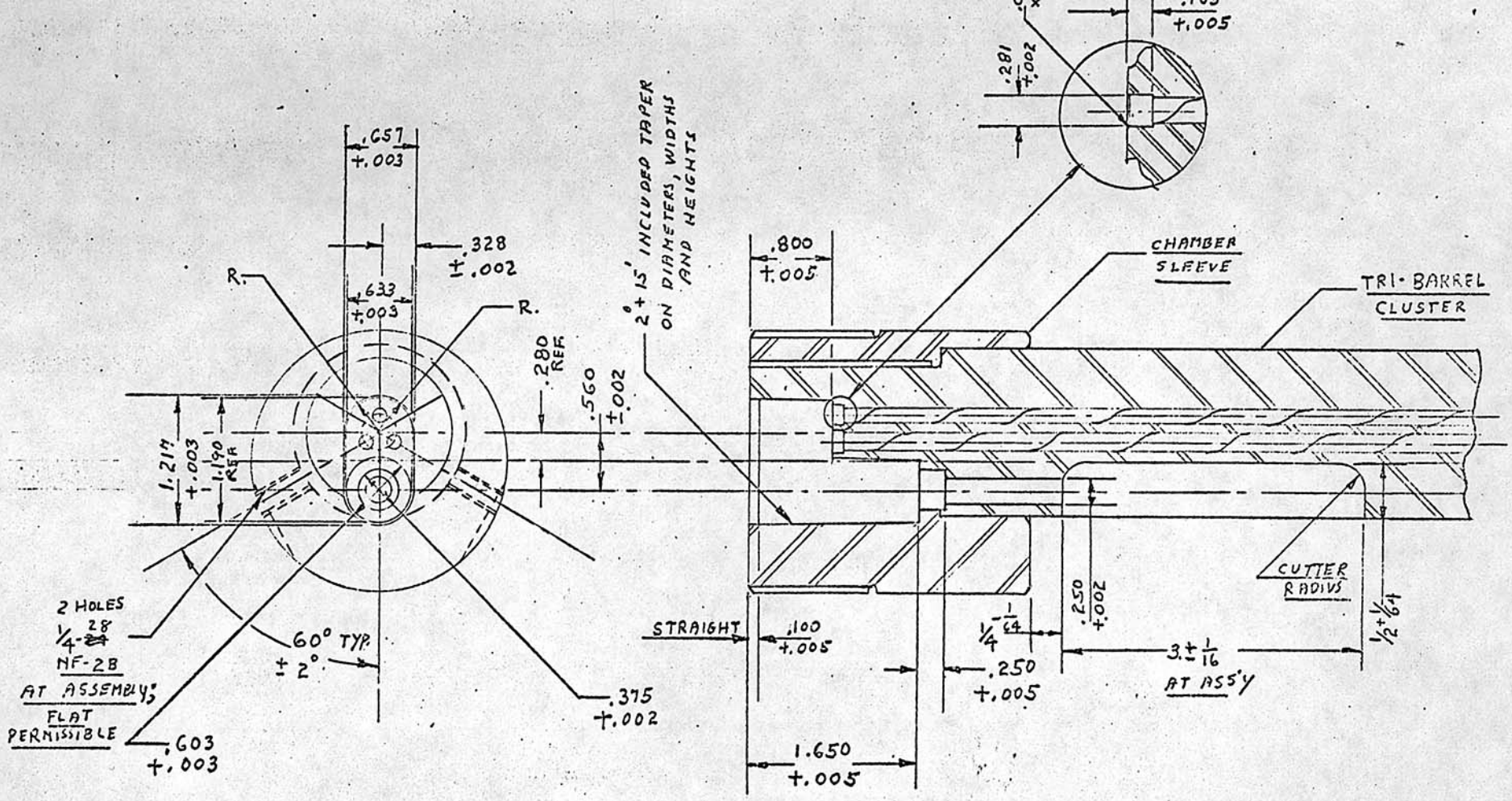

CHAMBER
MACHINED

HOPPMANN
CORPORATION
5410 PORT ROYAL RD.
POST OFFICE BOX 1463
SPRINGFIELD, VA. 22151

NO SCALE

A. J. Grant
1 FEB. 1979

R-29114-T

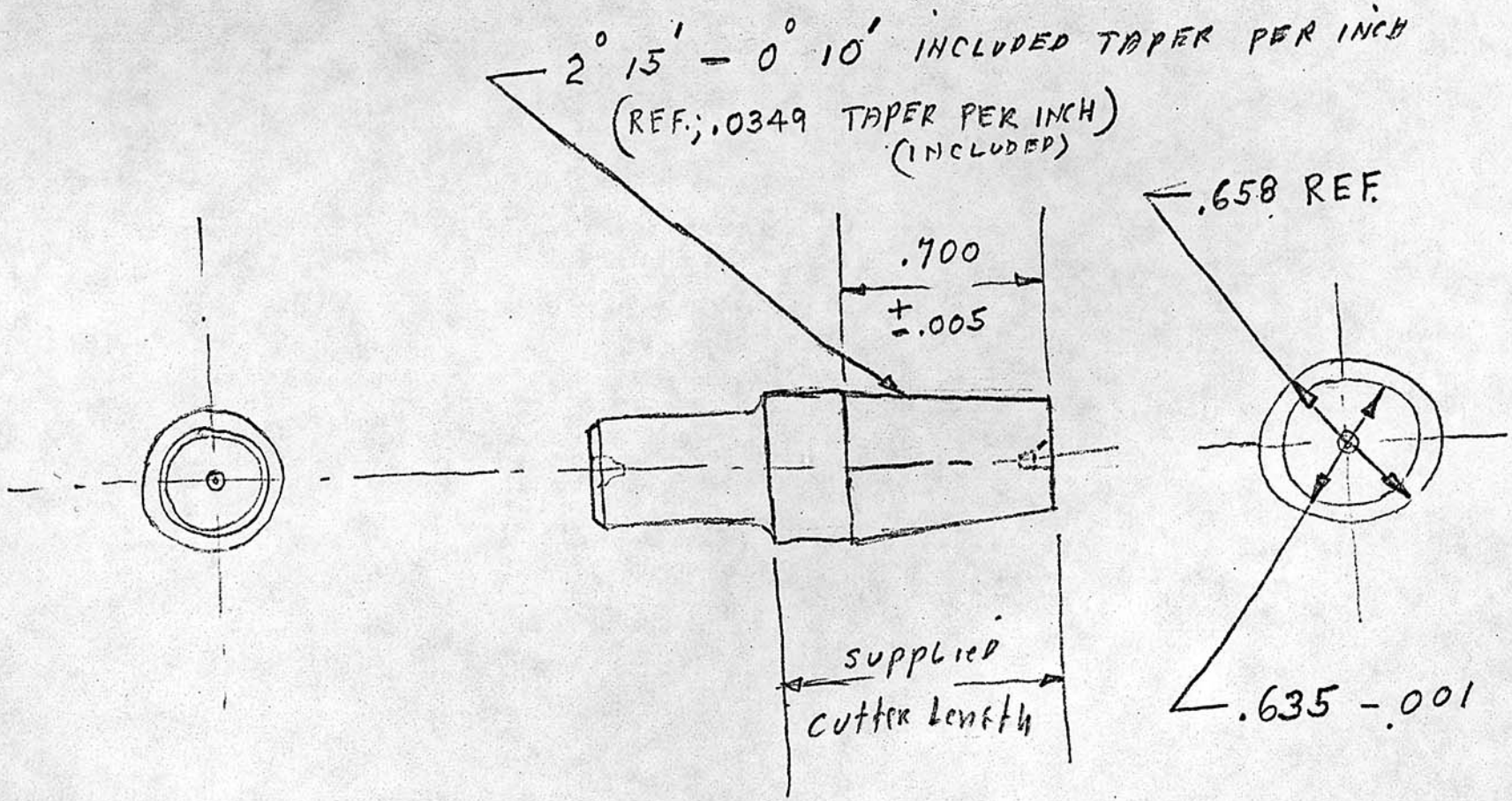

A J Grant
6 FEB. 1979

MAT'L. – STANDARD H.S. Steel END MILL; supplied

CUTTER #1
(CHAMBER)

HOPPMANN CORPORATION

NO SCALE

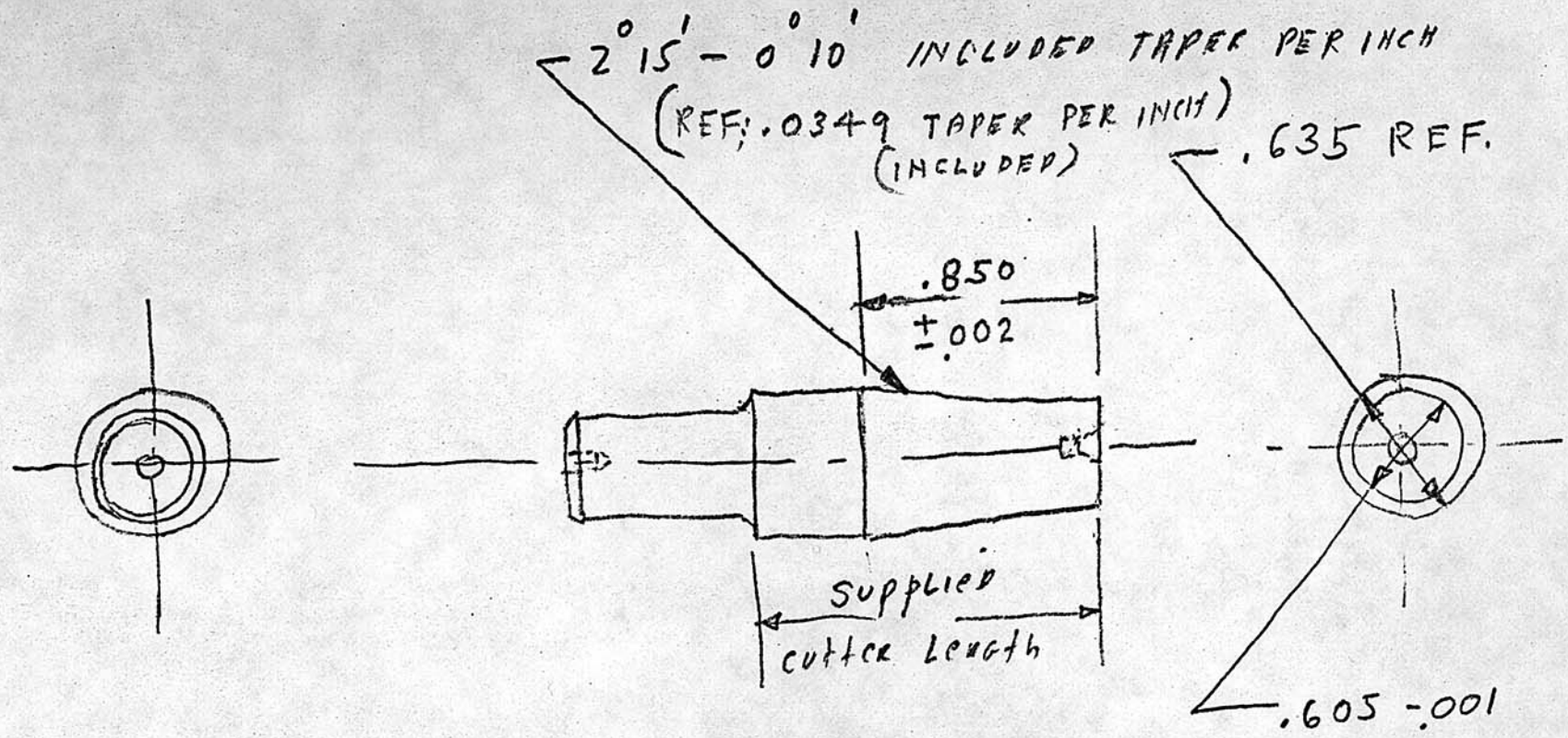

MAT'L - STANDARD H.S. STEEL
END MILL; supplied

Cutter #2
(CHAMBER)

O J Gramm
6 FEB. 1979

HOPPMANN
CORPORATION

D-29116-J

NO SCALE

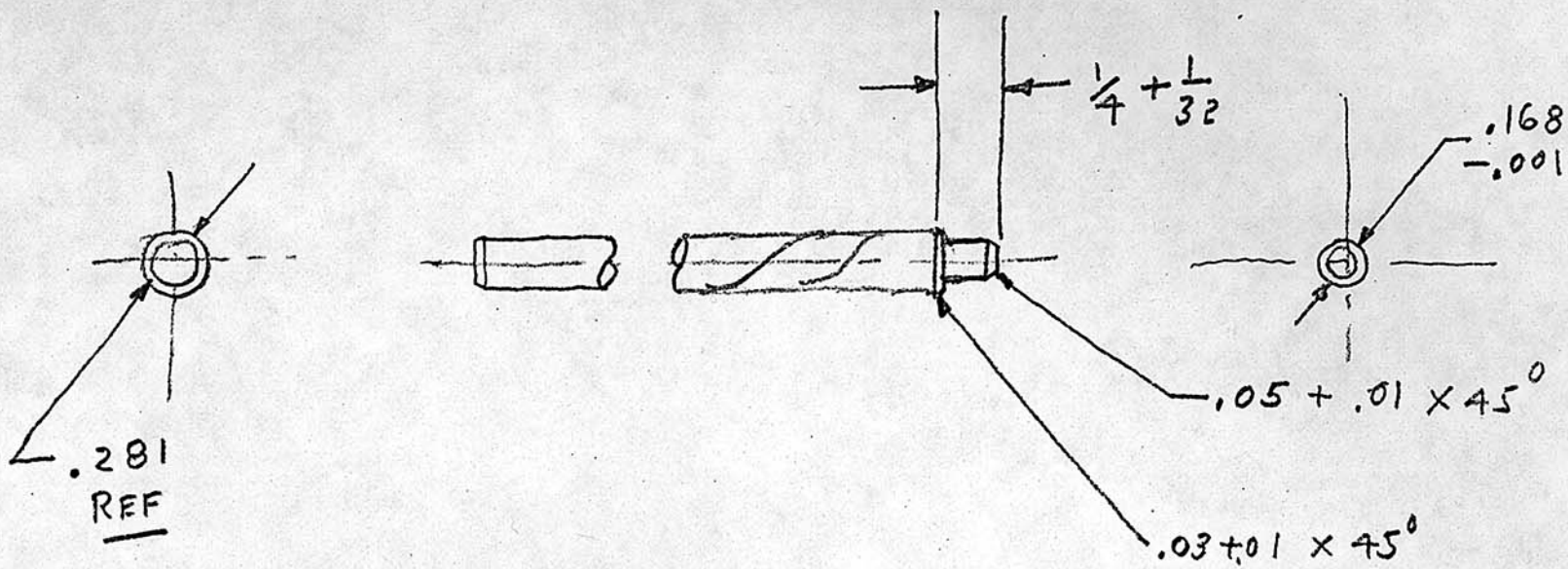

A J Grant
6 FEB. 1979

Mod i - STANDARD H.S. DRILL

CUTTER #3
(2" BORE)

HOPPMANN CORPORATION

NO SCALE

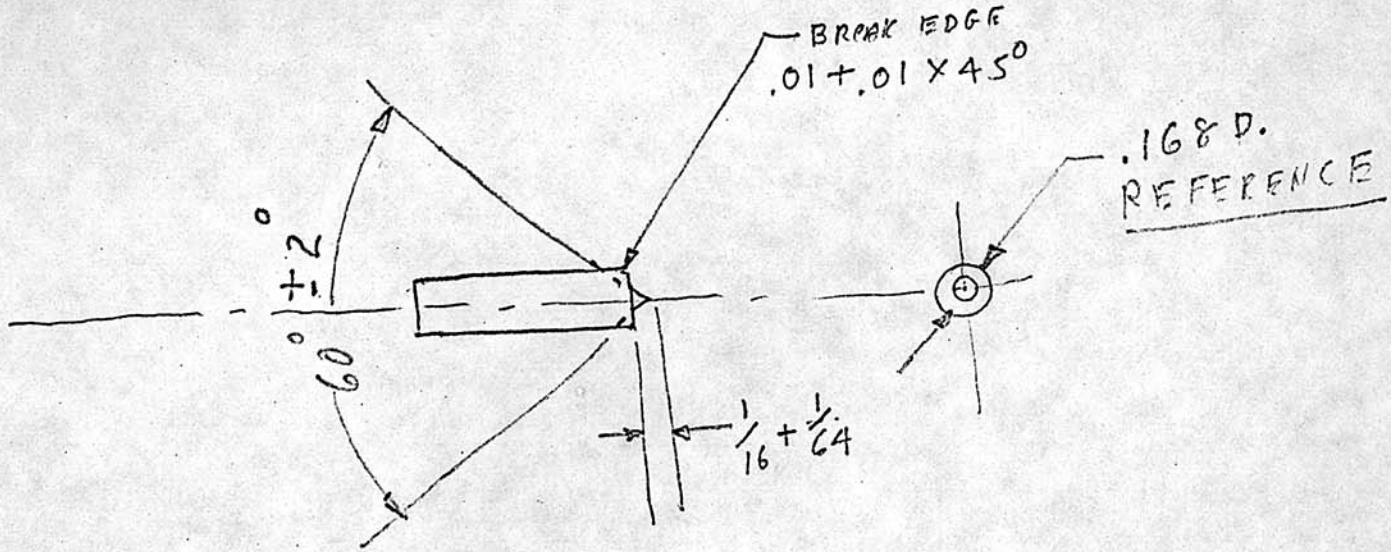

A J Grant
6 FEB. 1979

Spotting Punch
(BBL. to CARTRIDGE)

HOPPMANN CORPORATION

No Scale

Material - Hardened (3) Steel Pins, supplied

FINISH - None

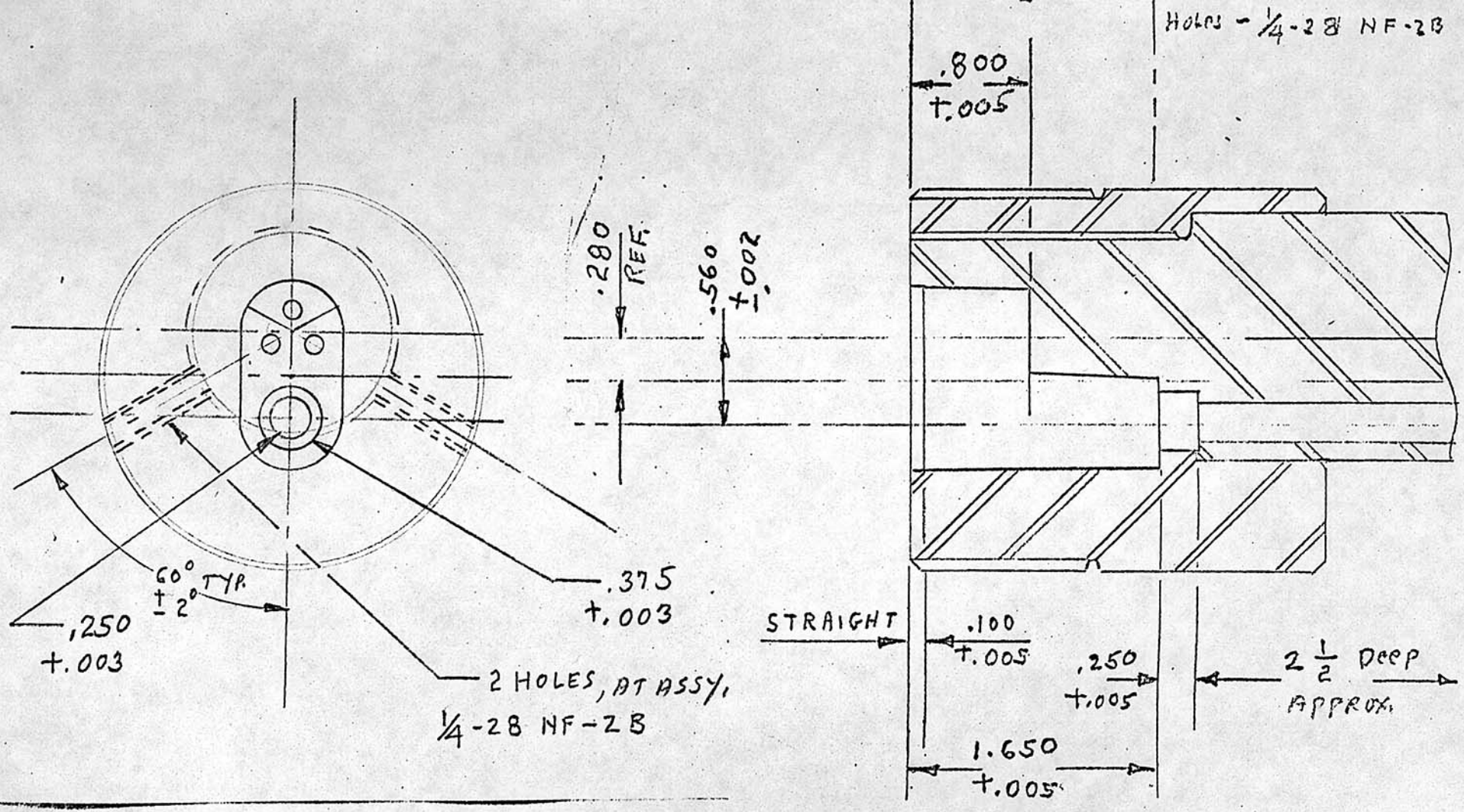

			MATERIAL				
			FINISH				
			SIGNATURE	DATE	SIGNATURE	DATE	
TOP ASSY	NEXT ASSY	QTY	DR		CH		
APPLICATION			EN	1/6/78	AP		

UNLESS OTHERWISE NOTED

√

REMOVE BURRS & SHARP EDGES

TOLERANCES

ANGLES ± 1/4°

FRACT. ± 1/32

DECIMALS

.X ± .030

.XX ± .015

.XXX ± .005

SHOP DETAIL

FOLDED CAVITY

HOPPMANN CORP.

5410 PORT ROYAL ROAD
SPRINGFIELD, VA.

SCALE	DWG. NO.	REV.
None	B-2919-J	

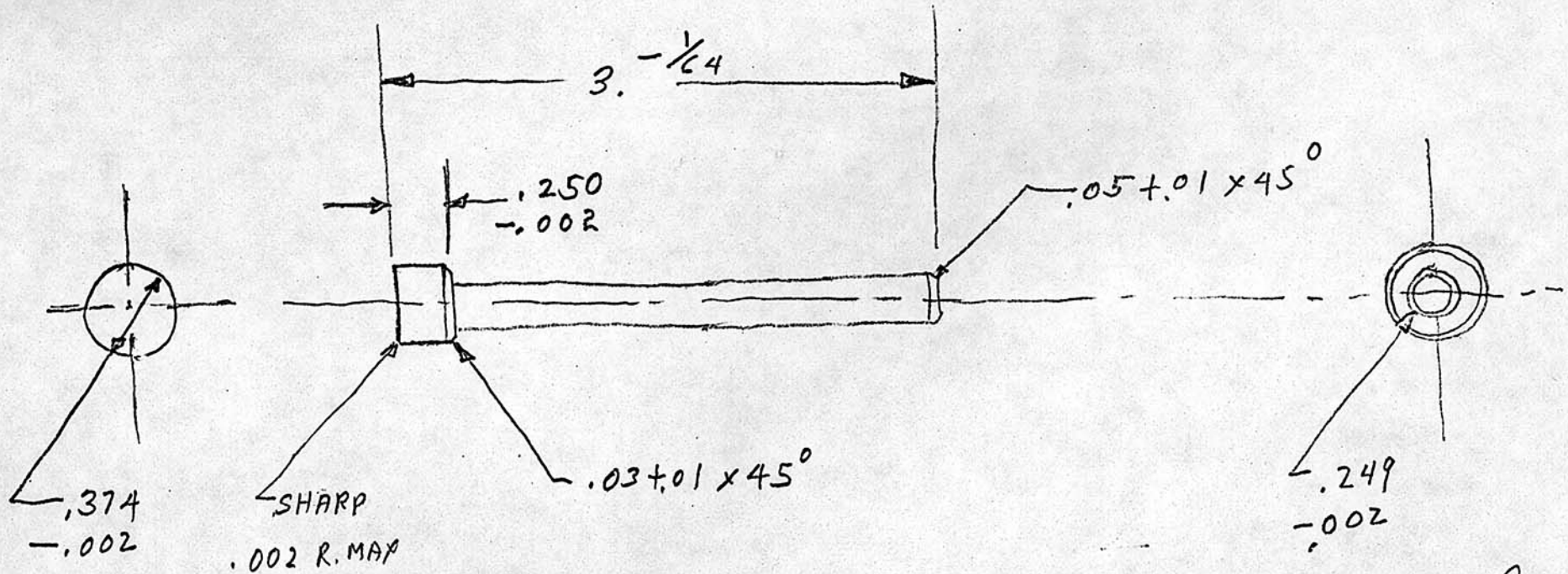

a J Grant
5 Feb, 1979

EJECTOR

Mat'l - Alloy Stel · Rc. 35/38) BEFORE MACHINING

Finish - Black oxide

HOPPMANN CORPORATION

NO SCALE

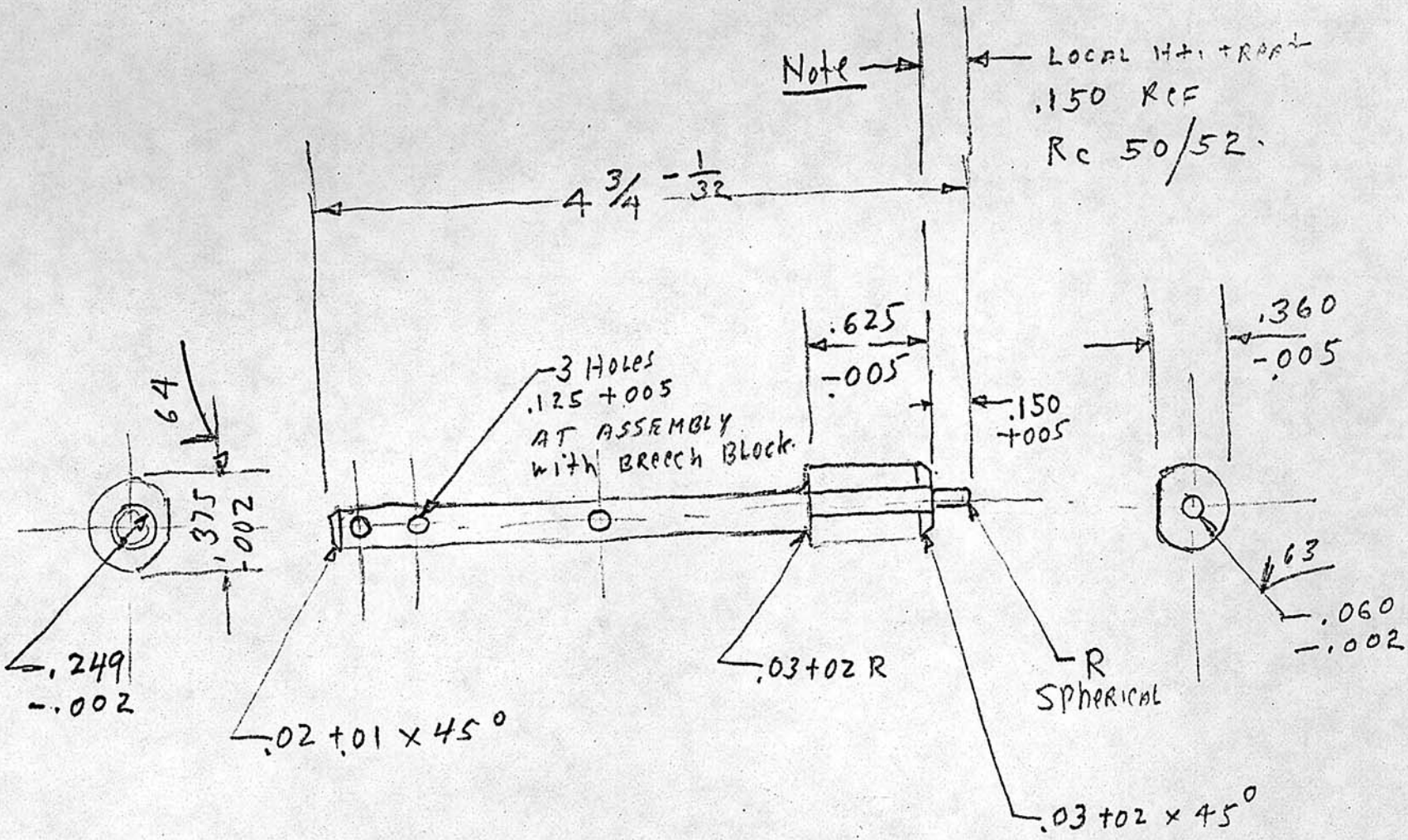

a J Grant
5 Feb. 1979

FIRING PIN

Mat'l - ALLOY Steel Rc 35/38 - see Note
BEFORE MACHINING
Finish - BLACK OXIDE

HOPPMANN CORPORATION

D-29171-T

NO SCALE

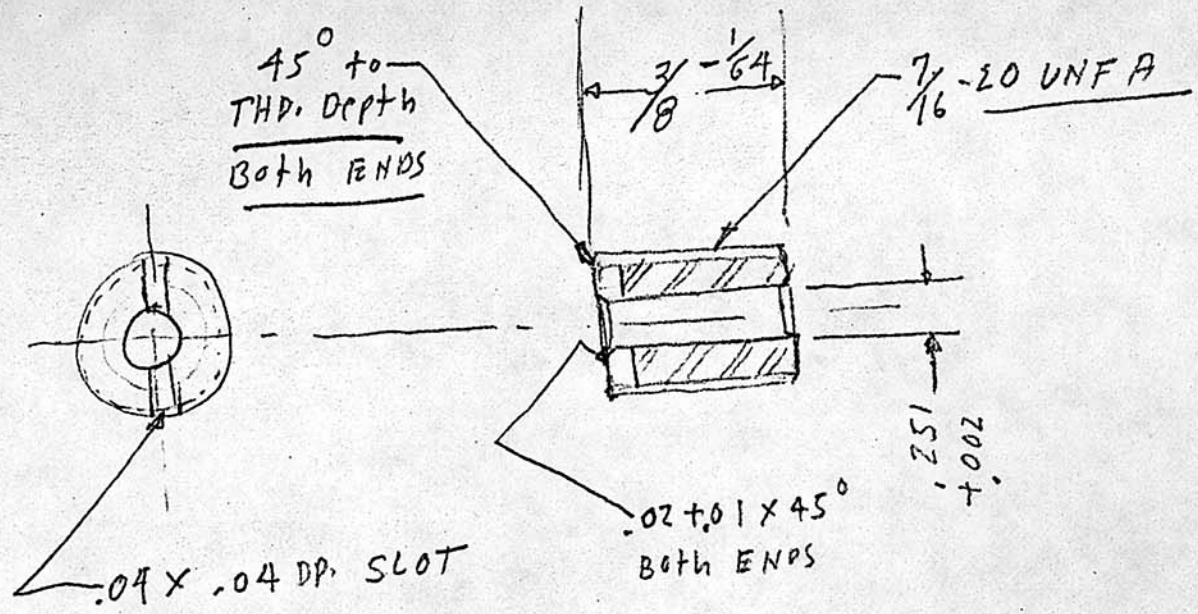

Note, MFGR FROM STANDARD 7/16 - 20 Bolt (Steel)

Matl - Steel

FINISH - BLACK OXIDE

RETAINER

A. J. Grandy
31 JAN. 1979

HOPPMANN CORPORATION

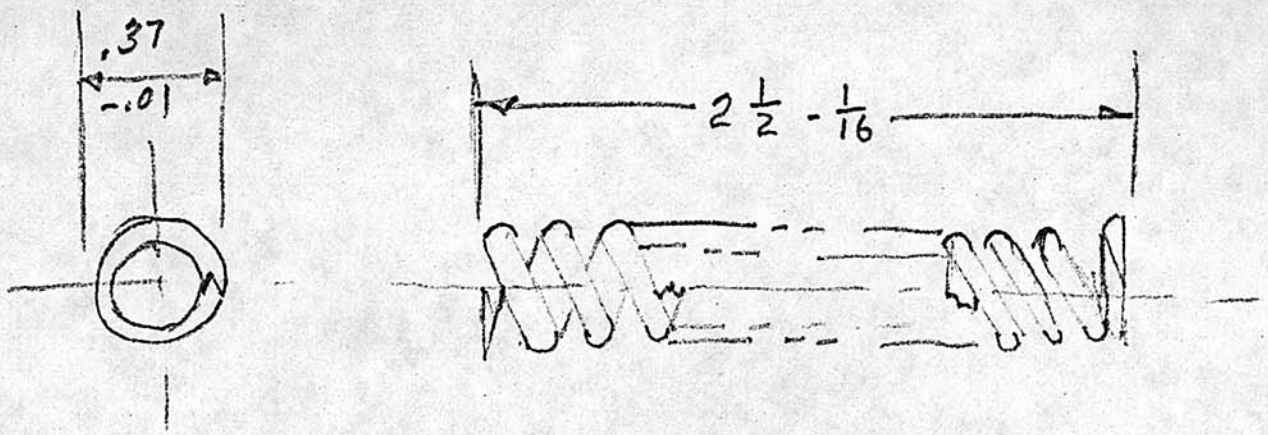

WIRE DIA. — .047 -.002

No. OF COILS — 20

TYPE ENDS — CLOSED & GROUND

MAT'L. — MUSIC WIRE

SOLID HEIGHT — .940 REF

A. J. Grandy
31 JAN. 1979

FIRING PIN SPRING

HOPPMANN CORPORATION

No. Cycle

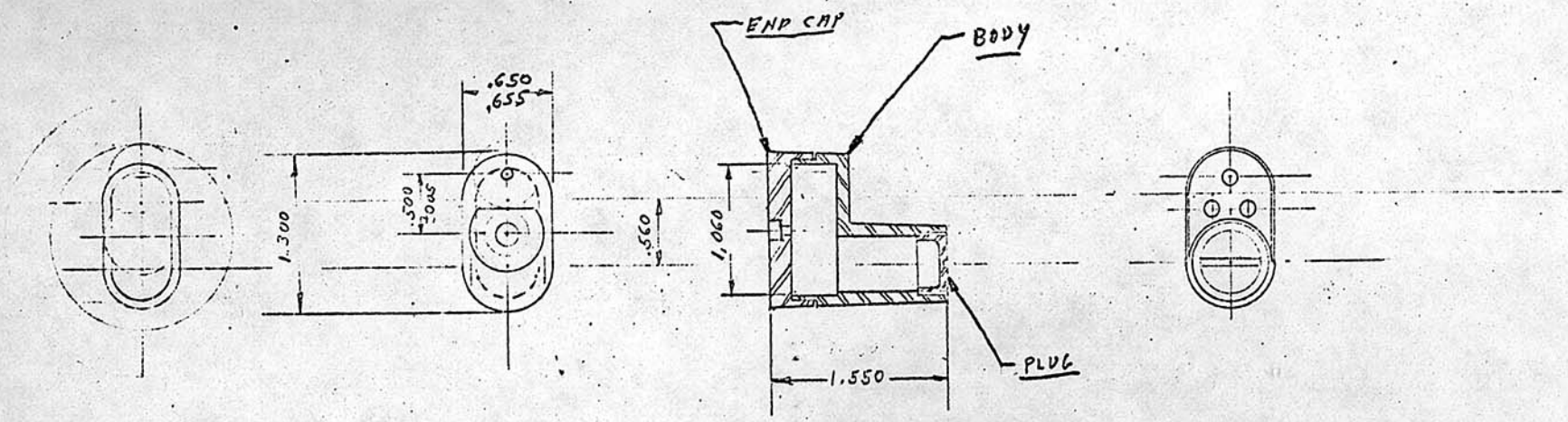

FOLDED CARTRIDGE
SCHEMATIC
TRI-BULLET; 4.32 MM

NO SCALE

			MATERIAL				UNLESS OTHERWISE NOTED	SCHEMATIC
							√ TOLERANCES	FOLDED TEST CASE
			FINISH				ANGLES ± ¼°	4.32 MM TRI-BULLET SYSTEM
							REMOVE BURRS & SHARP EDGES; FRACT. ± 1/32	HOPPMANN CORP.
							DECIMALS	5410 FORT ROYAL ROAD
			SIGNATURE	DATE	SIGNATURE	DATE	.X ± .030	SPRINGFIELD, VA.
TOP ASSY	NEXT ASSY	QTY	DR	2/2/79	CH		.XX ± .015	SCALE / DWG. NO. B-29124-J / REV.
APPLICATION			EN		AP		.XXX ± .005	

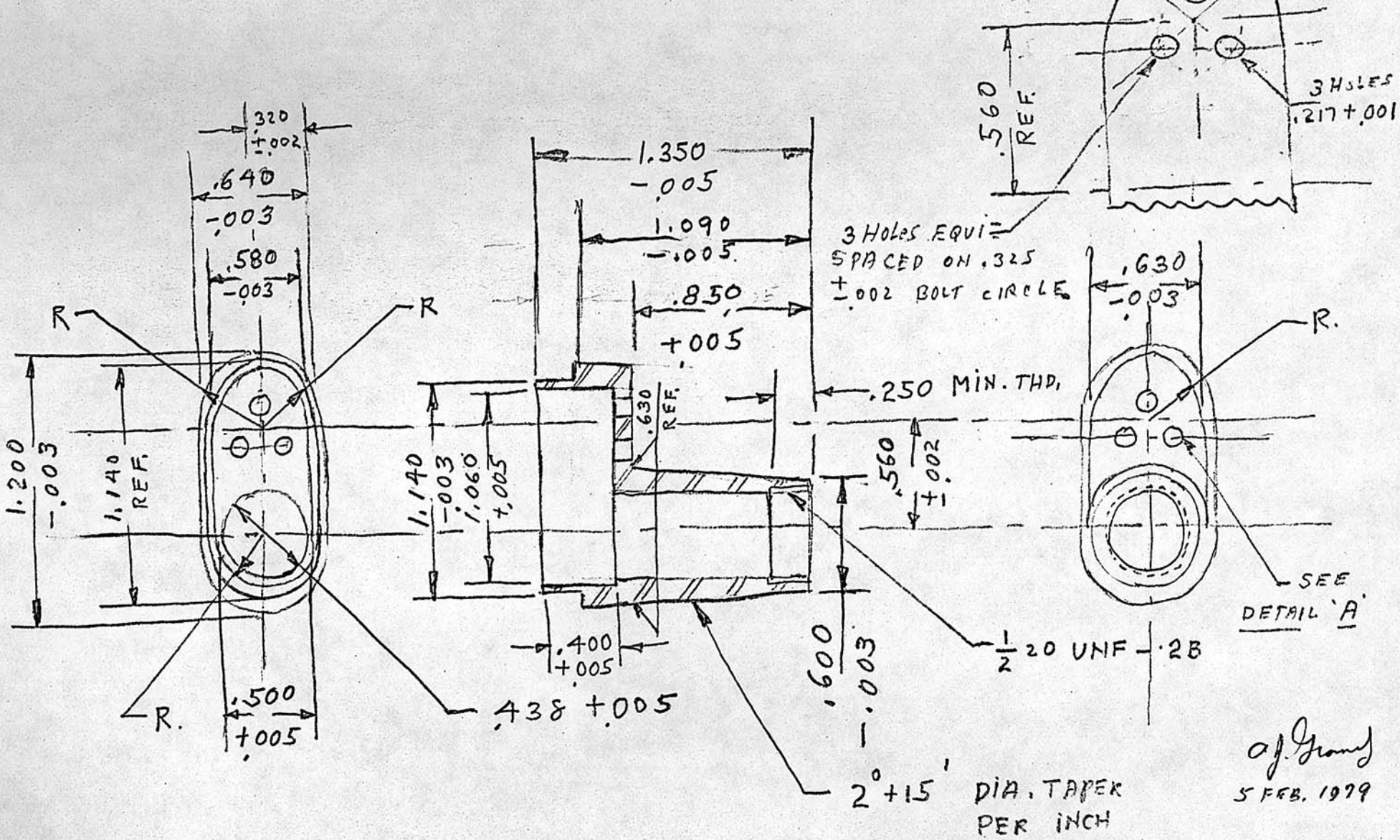

A.J. Grant
5 FEB. 1979

MAT'L - ALLOY Steel Rc-35/38 BEFORE MACHINING
FINISH - BLACK OXIDE

BODY

HOPPMANN CORPORATION

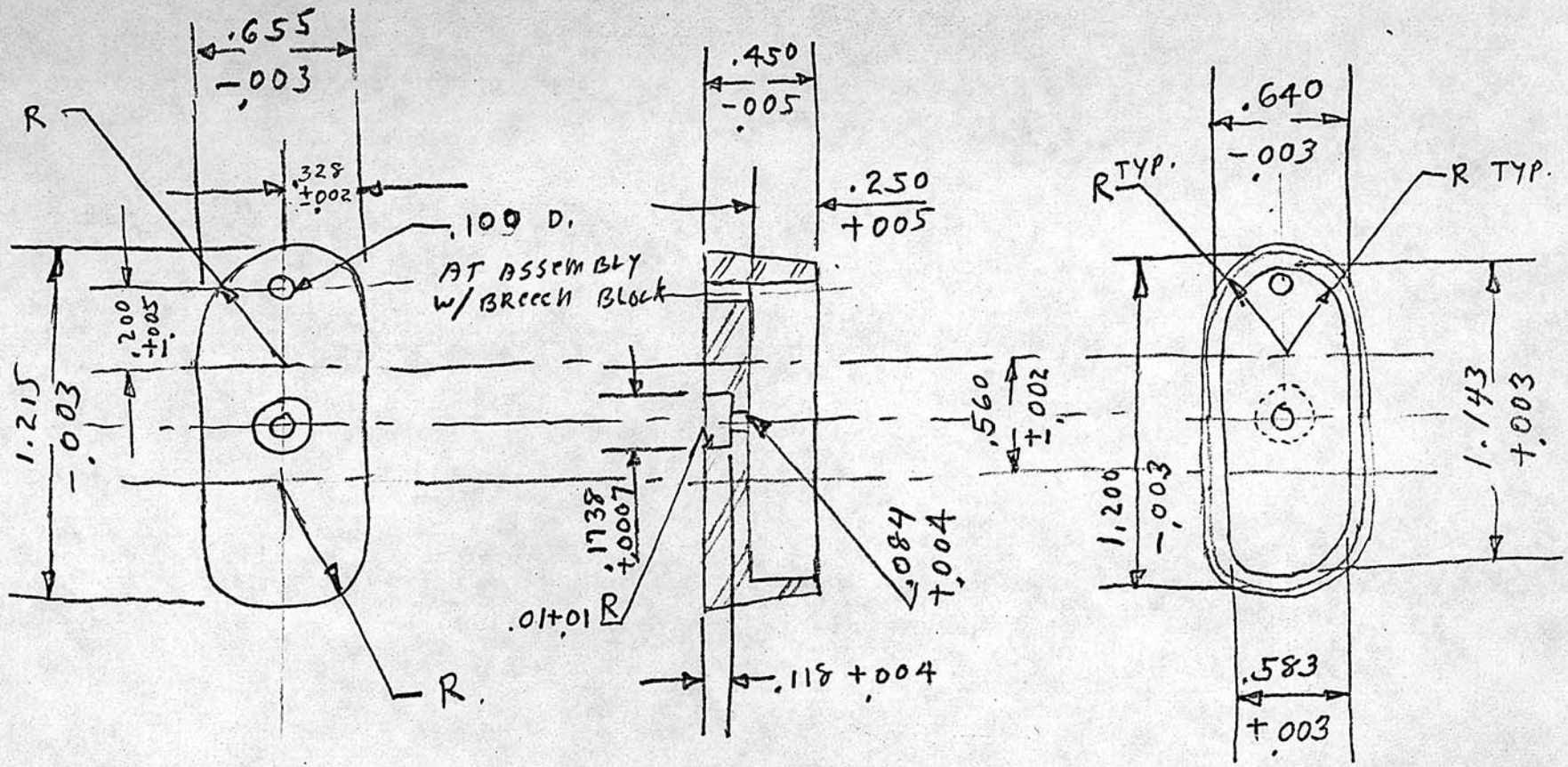

A J Grant
5 FEB. 1979

END CAP

MATL. - ALLOY STEEL, Rc 35/38, BEFORE MACHINING

FINISH - BLACK OXIDE

HOPPMANN CORPORATION

R-29176-T

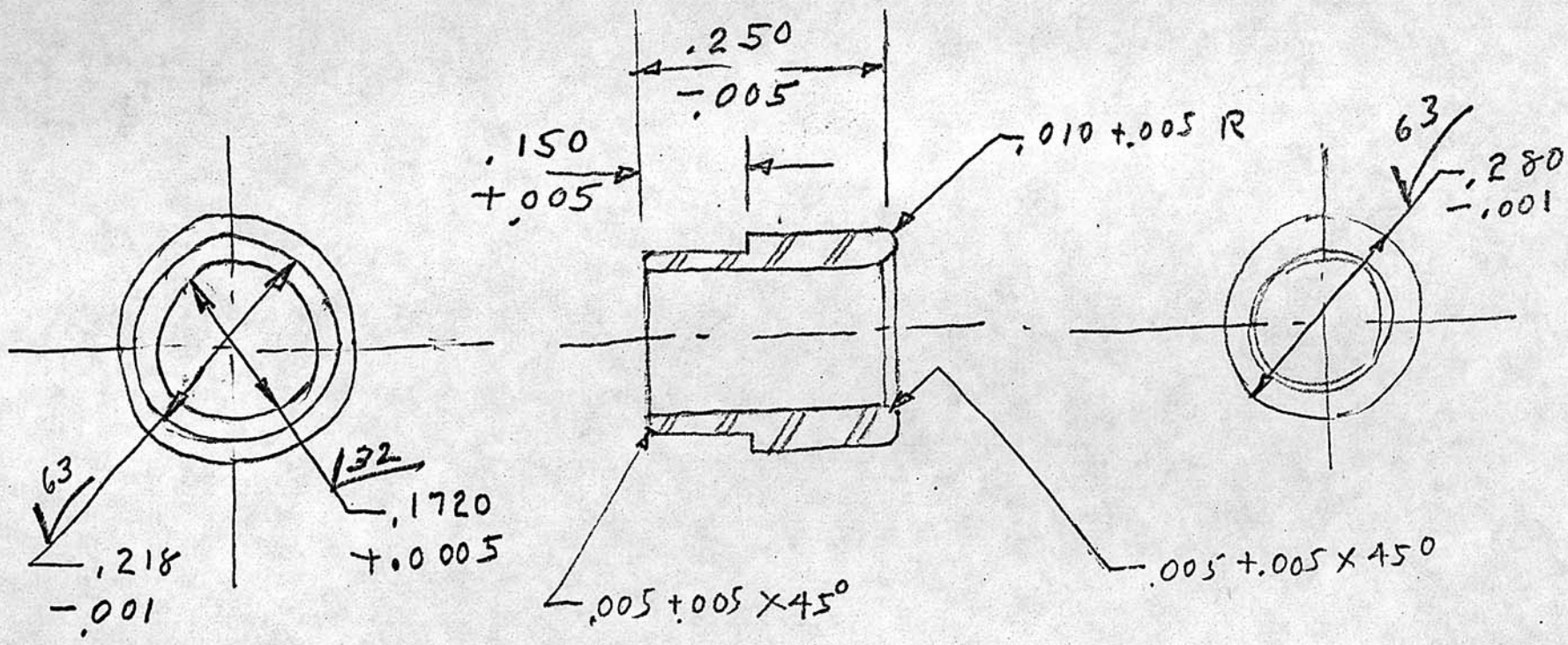

A J Grandy
5 FEB. 1979

BORE GUIDE

MAT'L - Alloy Steel Rc.35/38, BEFORE MACHINING

FINISH - BLACK OXIDE

HOPPMANN CORPORATION

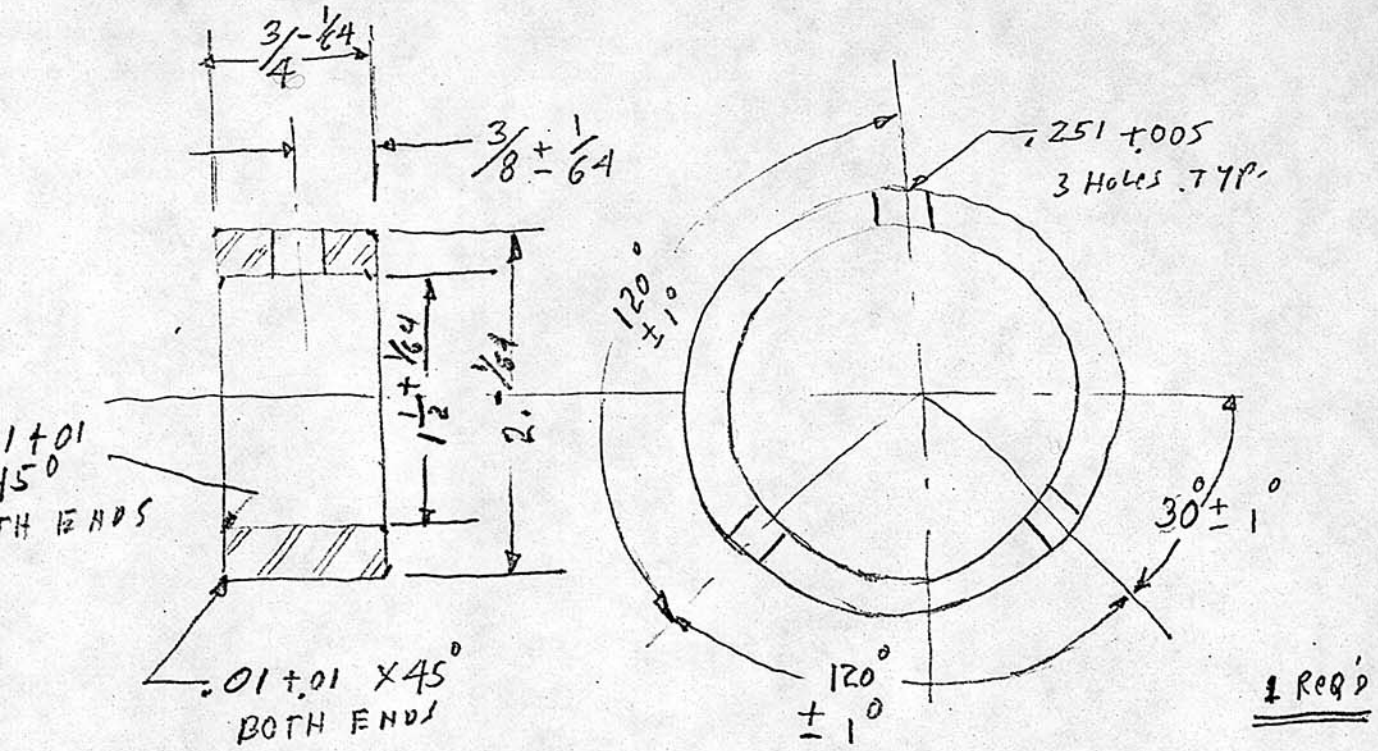

1 REQ'D

MAT'L - ALLOY STEEL, Rc 35/38 BEFORE MACHINING

FINISH - BLACK OXIDE

SLEEVE

B-29128-J

NO SCALE

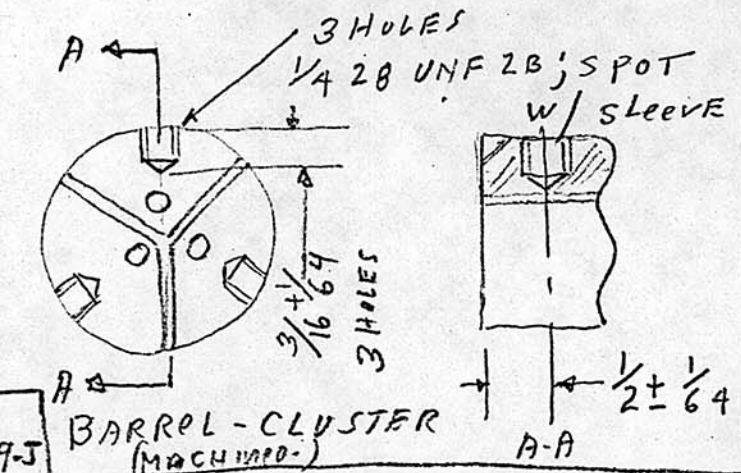

BARREL - CLUSTER (MACHINED)

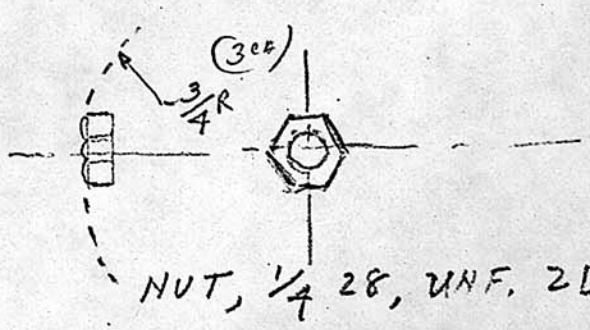

NUT, 1/4 28, UNF. 2B

6 REQ'D

STD. NUT

A-29130-J

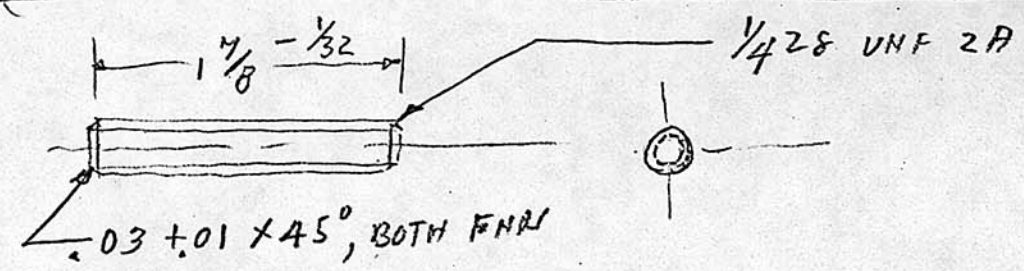

ALLEN SCREW (MODIFIED)

ADJUSTING SCREW

A-29131-J

3 REQ'D

TRI-BARREL ADJUSTING DETAILS

a. J. Grandy
7 FEB 1979

B-29132-J

HOPPMAN CORPORATION

	DIMEN. A
1	.312
1	.375
1	.500
1	.687

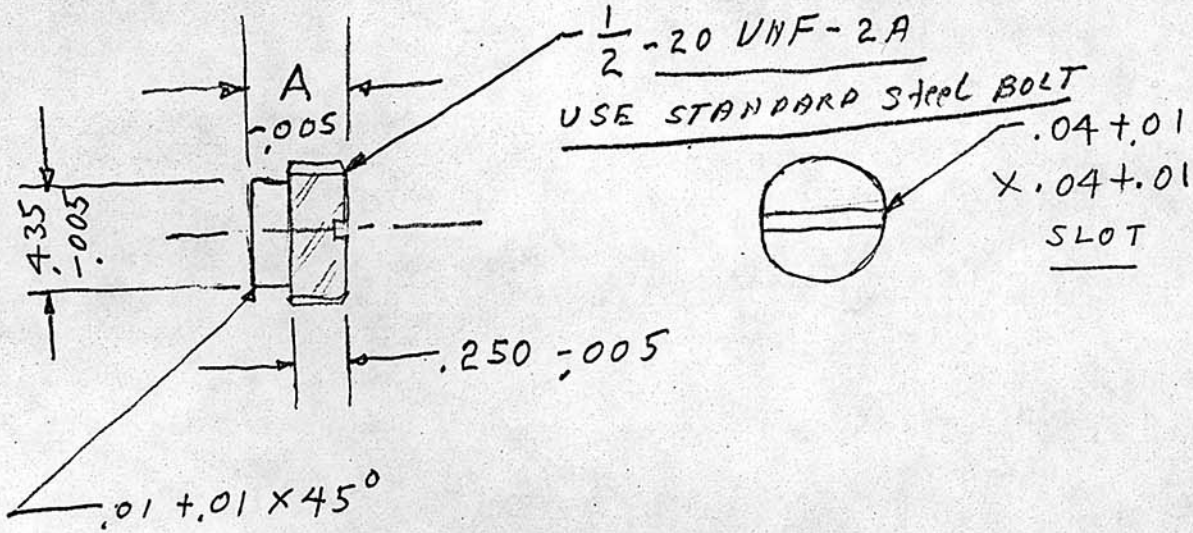

PLUG

A J Gray
5 FEB. 1979

MAT'L. - STANDARD 1/2-20 BOLT (steel)

FINISH - BLACK OXIDE

HOPPMANN CORPORATION

29133

N. SCALE